SALTON COMMUNITY SERVICES DISTRICT

Architectural Committee Agenda

1209 Van Buren Ave. Salton City, CA 92275

www.saltoncsd.ca.gov

December 8, 2022

Open Session 9:30 a.m.

COMMITTEE MEMBERS:	**STAFF:**
Michael Friese, Chairperson	Thania Garcia Board Secretary
Kenneth Perry, Member	
Erick Cervantes, Member	
John Connelly, Member	
Lizabeth Flowers, Member	

1. **CALL TO ORDER:** 9:30 a.m.

2. **ROLL CALL:**

3. **PLEDGE OF ALLEGANCE:** Michael Friese

4. **PUBLIC COMMENTS:**

Pursuant to California Government Code Section 54954.3 members of the public may address the Board at this time on any items of public interest that are within the Board's subject matter jurisdiction. The Ralph M. Brown Act, however, prohibits the Board from taking action on any matter not appearing on the agenda. Personal attacks on individuals, slanderous comments, or comments, which may invade an individual's personal privacy, are prohibited. Those who wish to address the Board should come to the microphone. Members of the public will be given three (3) minutes to address the board on any items of public interest. Public comments will be limited to a maximum of (30) thirty minutes per meeting.

5. **CONCENT CALEDER ITEMS**

Consent calendar items are expected to be routine and non-controversial, to be acted upon by the Architectural Committee at one time without discussion. If any committee member requests that an item be removed from the consent calendar, it will be removed so that it may be acted upon separately.

a. Approval of the minutes for the Architectural Committee meeting of October 27, 2022

6. **UNFINISHED BUSINESS:**

7. **NEW BUSINESS:**

a. Plan# 3075 Dennis & Diane Hines 1132 Mikete Avenue Thermal, CA 92274

APN# 017-711-009

b. Plan# 3076 Jose Arismendez 980 Valenzuela Avenue Thermal, CA 92274

APN# 016-332-004

8. ADJOURMENT:

_____

Thania Garcia, Board Secretary

Upon written request, this agenda will be made in appropriate alternative format to persons with disabilities as required by Section 202 of the American with Disabilities Act of 1990. Any person with a disability who requires a modification or accommodation in order to participate in a meeting should direct such request to the Secretary of the Board at least 72 hours before the meeting. Any public record, relating to an open session agenda item, that is distributed within 72 hours prior to the meeting is available for public inspection at 1209 Van Buren St, Suite 1, Salton City, California 9227.

APN: #017-711-009

Salton Community Services District

Architectural Committee Building Approval Form
Plan# 3075
Chartered by Chapter 59 of 1985 Codes and Laws – state of CA
Plans must conform to covenants, Conditions and Restrictions of tract.

Approved: _____ Disapproved: _____ Date: 11/23/2022 Expiration Date: _____

Architectural Committee Review Fees:

Existing Building Additions:	$50.00	____	Check#____
New Construction:	$50.00	X	Check#____
Sewer Capacity Fee:	$1000.00	____	Check#____
Sewer Connection Fee:	$2700.00	____	Check#____ (Deposit) _____

(Capacity Fee/Connection Fee Payable at time of sewer connection Plan Approval fee and Developer fee due at time of plan submission)
THIS APPROVAL MEETS ALL SCSD CC&R'S, BUT MAY NOT MEET IMPERIAL COUNTY TITLE 9 LAND ORDINANCES.

ARCHITECTURAL PLAN REVIEW:

Michael Friese: _____ Approved: _____ Disapproved: _____ Date: _____

Ercik Cervantes _____ Approved: _____ Disapproved: _____ Date: _____

John Connelly _____ Approved: _____ Disapproved: _____ Date: _____

Kenneth Perry _____ Approved: _____ Disapproved: _____ Date: _____

Lizabeth Flowers _____ Approved: _____ Disapproved: _____ Date: _____

Street Address: 1132 Mikele Ave City: Thermal

Lot# 9 Block# 6 Tract# 597 Zone: _____
APN: 017-711-009 Lot Size: _____

Living Area

Dimensions: Width: 16 Length: 32 Total Square Feet: 512 ☐'

Patios

Dimensions: Width: _____ Length: _____ Total Square Feet: _____

Carport or Garage

Dimensions: Width _____ Length: _____ Total Square Feet: _____

Room Addition

Dimensions: Width _____ Length: _____ Total Square Feet: _____

Mobile/Manufactured/Modular Homes Only

Date of Manufacture: _____ Expected Date of Delivery: _____

I, the undersigned, certify all information to be true and accurate description of my plans and intentions.

[signature]	DENNIS HINES DIANE HINES	619-933-7143
Owner's Signature	**Owner's Name (Printed)**	**Daytime Phone Number**

13911 Via de Jamul Jamul, CA 91935
Address, City, State, Zip Code

A permit must be obtained within 2years (24 months) from date of approval. If permit is not obtained, you will be required to re-submit for approval

hinesdd@aol.com

Sentry Buildings

Assembly Book

Revised February 6, 2015

the Richmond

16'x32' Building
w/ Full Loft

Manufactured by Reynolds Building Systems, Inc.

205 Arlington Drive Greenville, PA 16125 724-646-3775

This manual is copyrighted. Under the copyright laws, this manual may not be copied, in whole or in part, without consent from Reynolds Building Systems, Inc. © Copyright 2012

Important Information About Your Shed Kit

Thank you for purchasing our Richmond shed kit. The material supplied is listed on the back page. **If you have received duplicate books, use the one with the latest revision date.**

The material may be delivered in two shipments. Our shipment will contain the roof gables and truss components. The nails are packed in the first layer of gable panels. It is not necessary to unpack the rest of the material until you have built the lower walls and 2nd floor loft.

The balance will be delivered by a local lumber supplier. When you receive their material, check the material delivered against the material list on the back page. If you feel you are missing any material listed, call the store as soon as possible.

The foundation size should measure 16'-0" wide by 32'-0" deep. **Do Not** make the foundation larger. The siding should project beyond the foundation for water to expel properly from the walls. Check building code in your area for foundation requirements.

IMPORTANT: Unpack the material from our pallet, then carefully disassemble the pallet. The 2x4s will be used for bracing. The OSB panels for roof sheathing. The pallet is secured together with square head screws. The bit for the screws is packed in the hardware bag.

The LP siding has a 50 year warranty and is already primed. Apply two coats of latex acrylic paint for the finish coat. Paint the bottom edge of the siding, this is important. Maintain 6" to 8" of clearance from the bottom edge of the siding and the ground. Don't allow garden mulch to build up and keep shrubs a minimum of 1' away from the building.

Stacking the boards, according to size, will make them easier to find when needed. **Do Not** discard any material, *no matter how small*, until your building is complete.

Our component kit does not include the shingles, giving you a choice of color and quality. The breakdown of the material you need to supply is listed on the back page.

If you have any questions about assembling the kit, call 800-245-1577. If you are calling after normal business hours, call 724-866-HELP (4357) or email to help@barnkits.com.

Before you begin construction, be sure to study this assembly manual. Also, obtain a building permit and check all pertinent building code regulations.

Thank you for your purchase.

Bill & Linda Rinella, owners

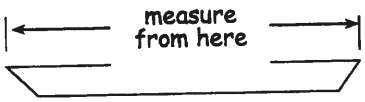

When measurements are given for board length, it is from the longest side of the board.

Tool List

- ☐ Hammer & Phillips Screwdriver
- ☐ Framing Square & Level
- ☐ Circular Saw
- ☐ Power Screwdriver/Drill
- ☐ Measuring Tape
- ☐ **2-12' Step Ladders**

Always wear safety glasses when cutting or nailing!

Step 1 Assemble Rear Wall

1. **Note:** When building the lower walls, use treated 2x4s for the bottom wall plate.

   Cut (2) two 2x4-8' boards (one will be treated) to a length of 8' - 0". Position the boards together and indicate with 'X' marks, where the wall studs will be located.

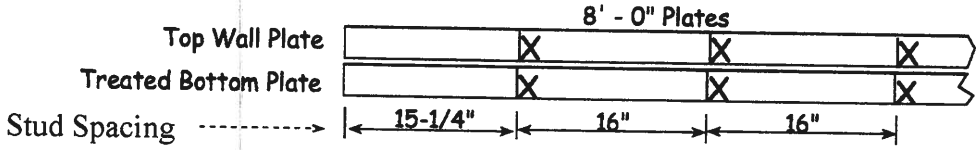

NOTE: In western states all wall studs are <u>92-1/4" in length!</u>

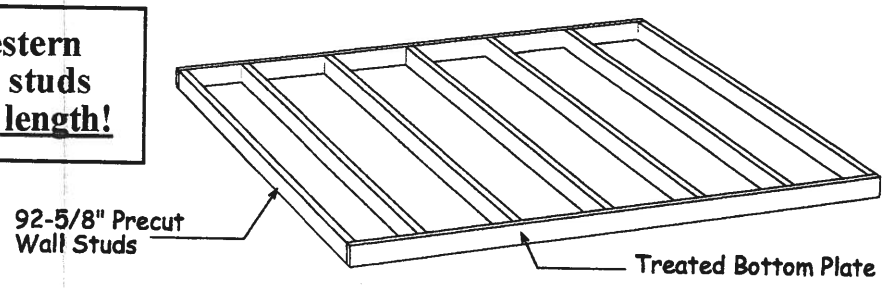

2. Install 92-5/8" wall studs between the top and bottom plates. Nail the treated bottom plate to the wall studs with <u>16d galv. deck</u> nails. Use 16d sinkers to nail the top plate.
3. Repeat to build another 8' long wall frame.
4. Butt the frames together. Do Not nail frames together so they can be separated later.
5. Square the frames. Measure the wall diagonally (corner to corner). Then measure the opposite corner. The measurements will be the same, if the wall is square.
6. Install the first siding panel flush with the end of the frame. Install (2) two more siding panels. Do Not nail the 'LAP' edge to the first wall so you can separate the frames and install the walls separately. Use 8d galv. nails, spaced 9" apart.

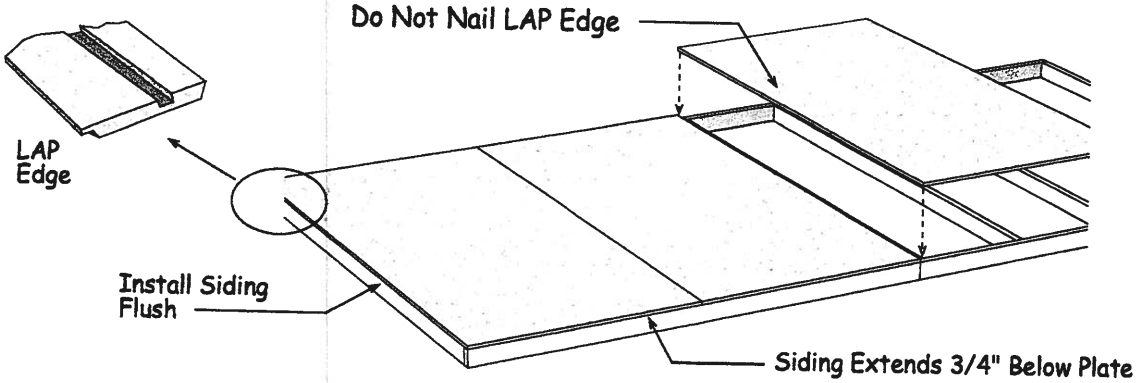

Step 2 Assemble Front Door Wall

1. Locate (2) two 2x8 boards that are 10' long. Cut the 2x8 boards 3" longer than the rough opening required..

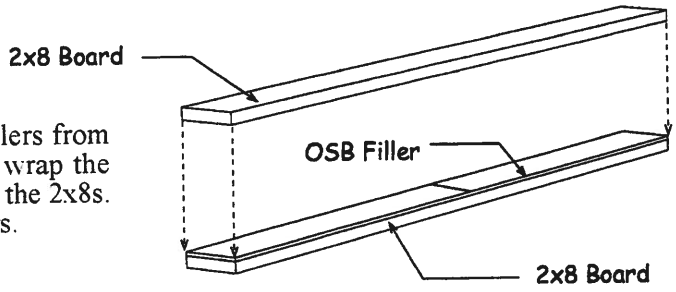

2. Cut (2) two 7-1/2" x 48" long fillers from OSB sheathing that was used to wrap the pallet. Install these fillers between the 2x8s. Assemble header using 16d sinkers.

3. Cut a treated 2x4-16' to 16'-0" for the bottom plate.
4. From regular 2x4-16' boards, cut (1) one to 16'-0" and (1) one to 15'-5".
5. Assemble the front wall panel using the wall plates cut above and pre-cut wall studs .
6. Install the 2x8 header. Note: The bottom 2x4 will be removed from the door opening after the walls are set. Subtract 1-12" from the rough opening for the door you are installing. Cut pre-cut studs and install under the door header.
7. Install 2x4 blocks to hold the spacing between the door header and the 2x4 top plate.

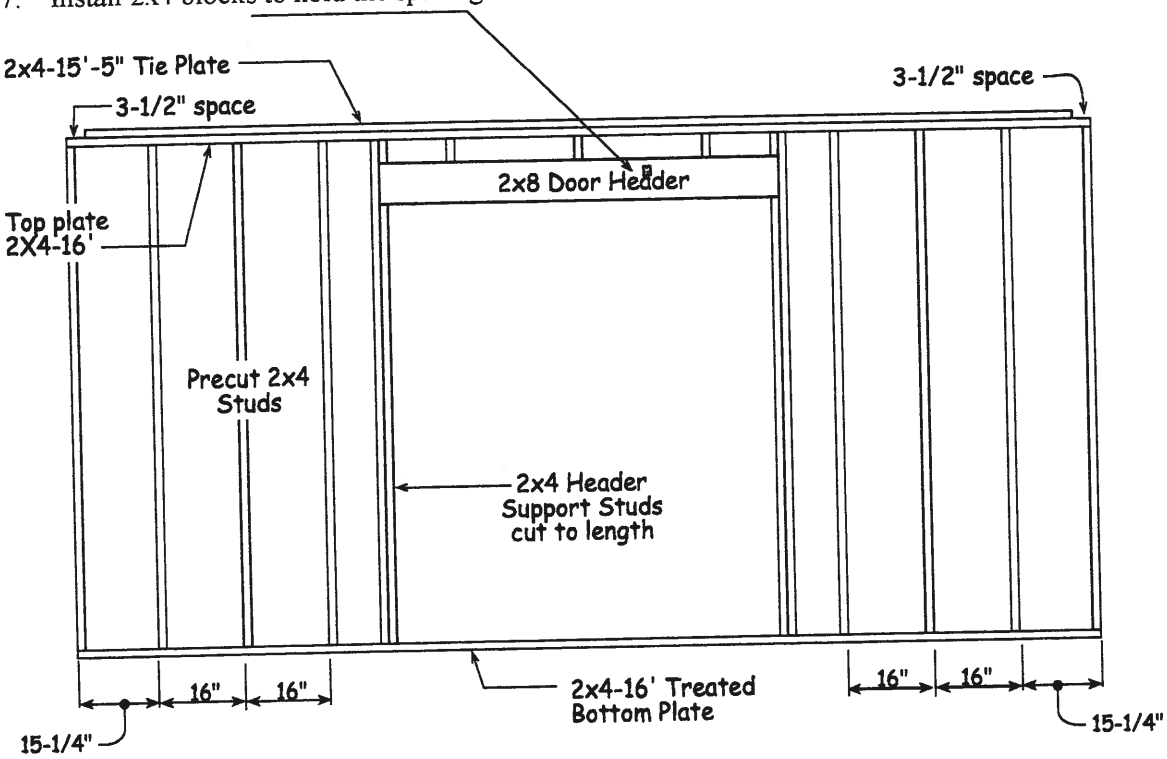

Step 2 Assemble Front Door Wall Continued

8. Square Wall Frame. Install a 4x8 panel with the 'LAP' edge flush with the left wall stud.
9. Install more 4x8 siding panels.
10. Cut siding from door opening.

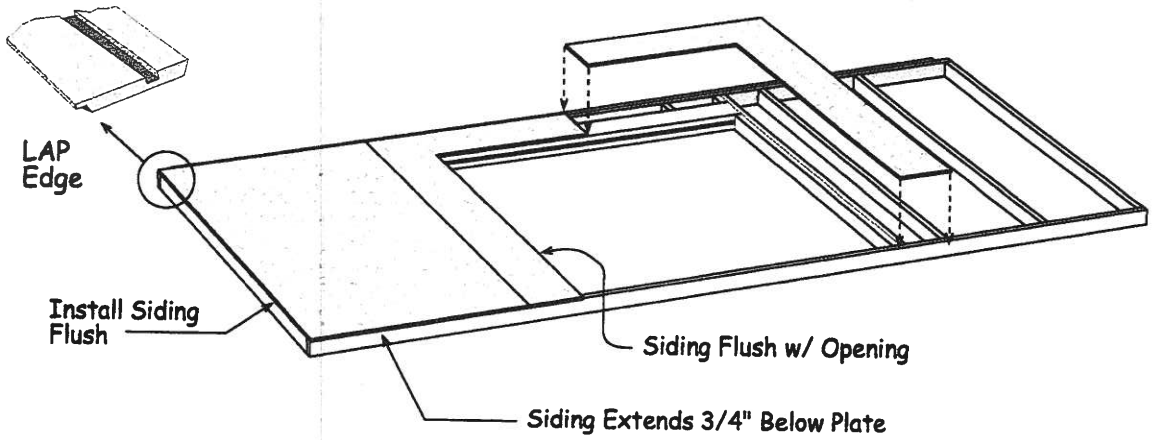

Step 3 Build Beam Supports

1. Cut (2) two pre-cut wall studs to a length of 83-3/4" (83-3/8" if using western wall studs). Nail one of the 2x4s to a pre-cut wall stud. Use 10d sinkers.
2. Nail (3) three 3-1/4" x 16" long OSB fillers to the 83-3/4" long 2x4 as shown. Use 6d common nails.
3. Install the other 83-3/4" (82-3/8") long 2x4 over the fillers.
4. Repeat to assemble (3) three more beam support.

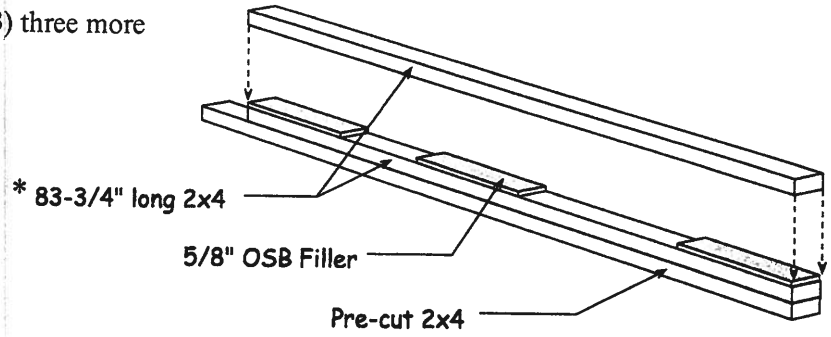

* 83-3/8" When using western wall studs.

Supplement Detail

Install Window Opening

Details show installing a 28" x 36" window. If you are installing a different size window you will need to adjust the opening size. Cut all lumber to frame in the window opening from 8' long boards.

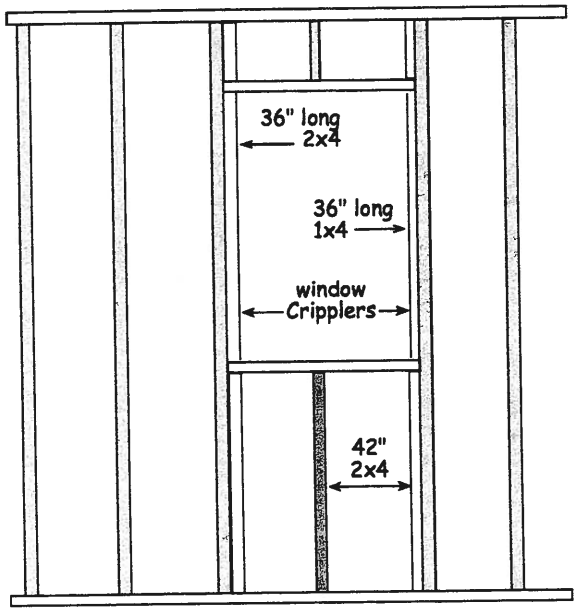

1. The wall studs shown in gray are on layout. Cut the center 92-5/8" long stud under the window to a length of 42".
2. Cut (2) two more 42" long 2x4s and install against the side studs.
3. Cut (2) two 2x4's to fit between the studs. Length should be 30-1/2".
4. Cut a 1x4 and a 2x4 to a length of 36" and install against the side wall studs.
5. Install a 30-1/2" board on top of the cripplers.
6. Cut blocks for above the window opening from leftover 2x4s.

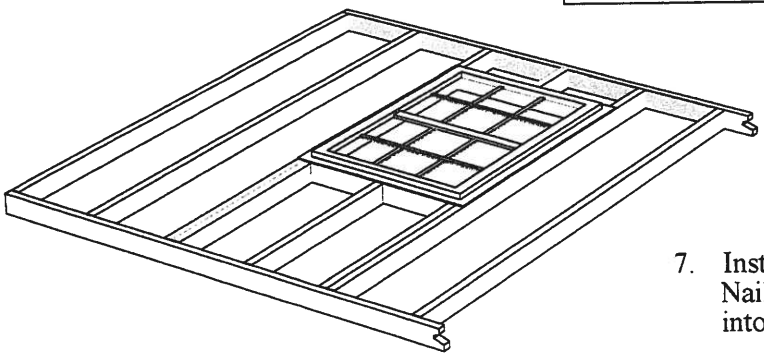

7. Install window over opening. Nail through the nailing flange into studs with 6d nails.

8. Cut siding around the window leaving a small gap for caulking.

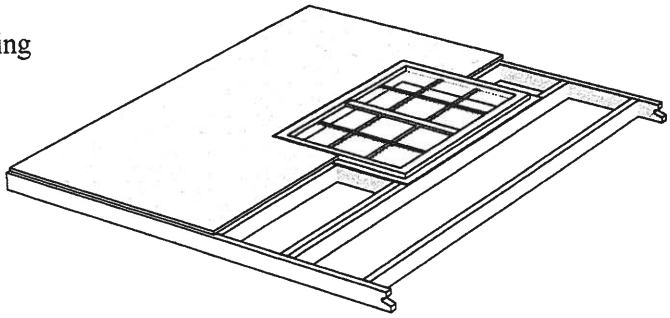

Step 4 Build 12' Sidewalls with Beam Support

1. Cut a 2x4-12' treated board to a length of 140-1/2".
2. Cut a 2x4-12' board to a length of 137". This will be the top plate.

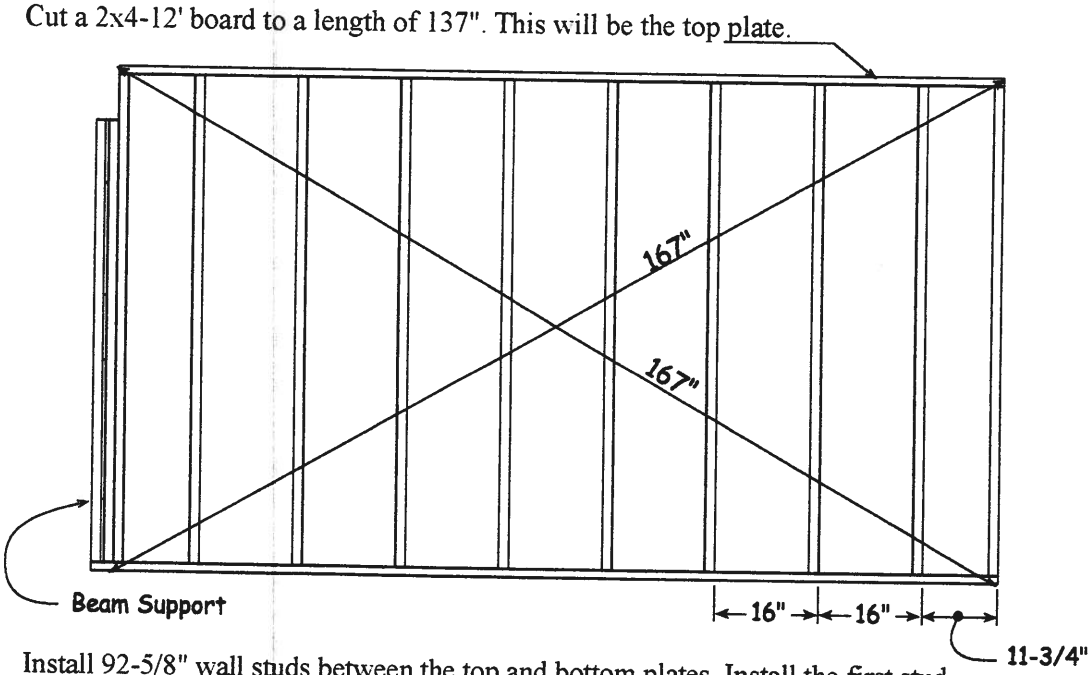

3. Install 92-5/8" wall studs between the top and bottom plates. Install the first stud 11-3/4" from the right end. Nail the treated bottom plate to the wall studs with 16d galv. deck nails. Use 16d sinkers to nail the top plate.
4. Install a beam support, built in **Step 3**, at the left end. Square wall.
5. Install the first 4x8 siding panel with the 'LAP' edge extending 3/1/2" past the right end of the wall frame. The siding will extend 3/4" below the bottom plate.

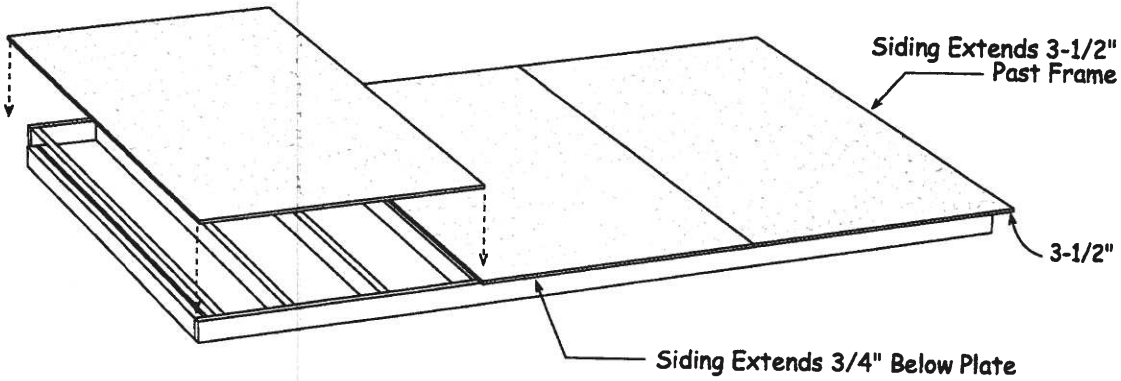

6. Install (2) two full width siding panels.
7. Repeat numbers 1 thru 4 to build another wall frame. DO NOT apply siding.

Step 5 Build 8' Center Sidewalls

1. Cut (2) two 2x4-8' boards (one will be treated) to 8' - 0". Position the boards together and indicate where the wall studs will be located.

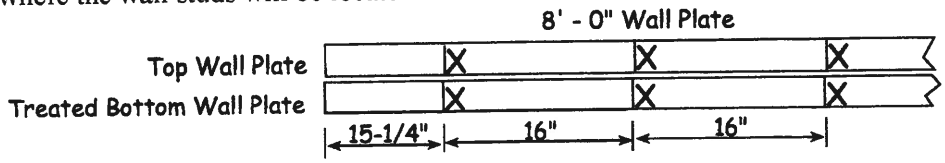

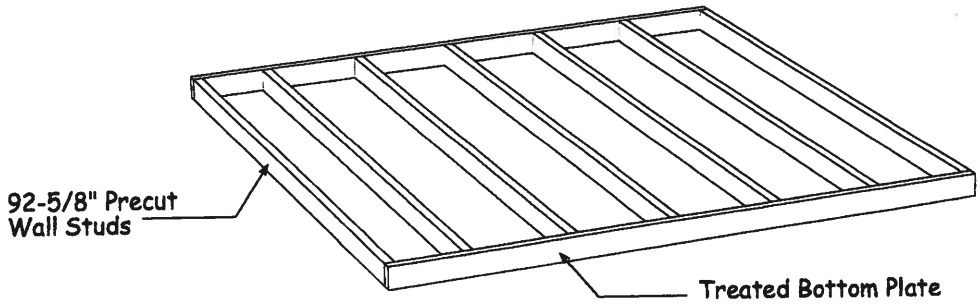

Step 6 Assemble Sidewalls

1. Position the frame from above next to the panel with the beam support. Do Not nail frames together. Square the wall frame. Install a siding panel. Do Not nail the 'LAP' edge to the 140-1/2" wall so you can separate the frames and install the walls separately.
2. Position the 140-1/2" long wall frame, without siding, next tot he 8' wall frame. Do not nail frames together.
2. Install siding panels. The last panel will extend 3-1/2" beyond wall frame.

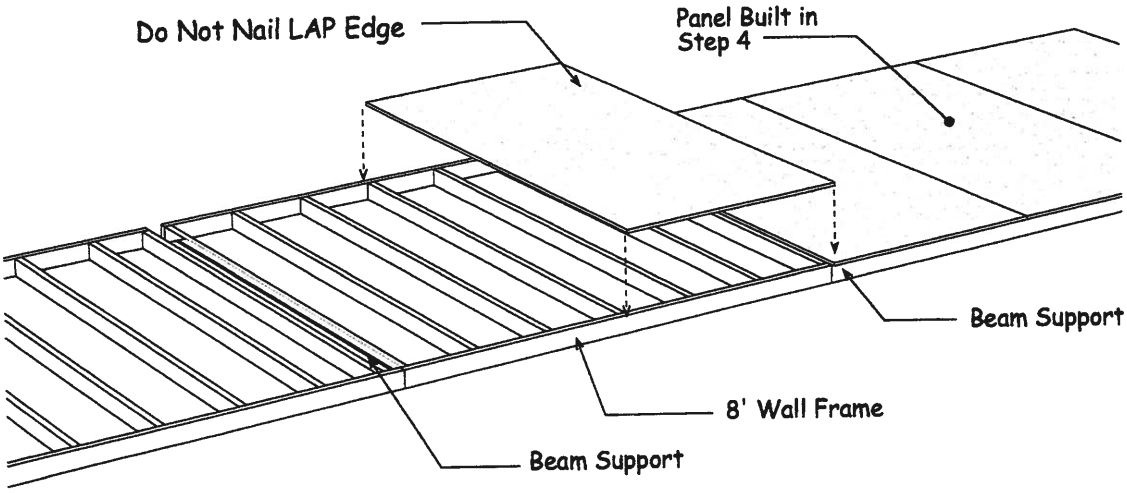

4. Repeat **Steps 4** thru **Step 6** to assemble the opposite sidewalls.

Step 7 Set Wall Panels

1. Set the left sidewall, *with the beam support*, panel and the 96" long back wall panel. Secure the corner together with 16d sinkers.
2. See the other back wall panel and the right sidewall panel.
3. Brace sidewalls using 90" long 2x4s (pallet material).
4. Cut a 2x4-16' to a length of 15'-5" and install across the top of the back wall. The 2x4 will set back 3-1/2" from each end of the back wall.

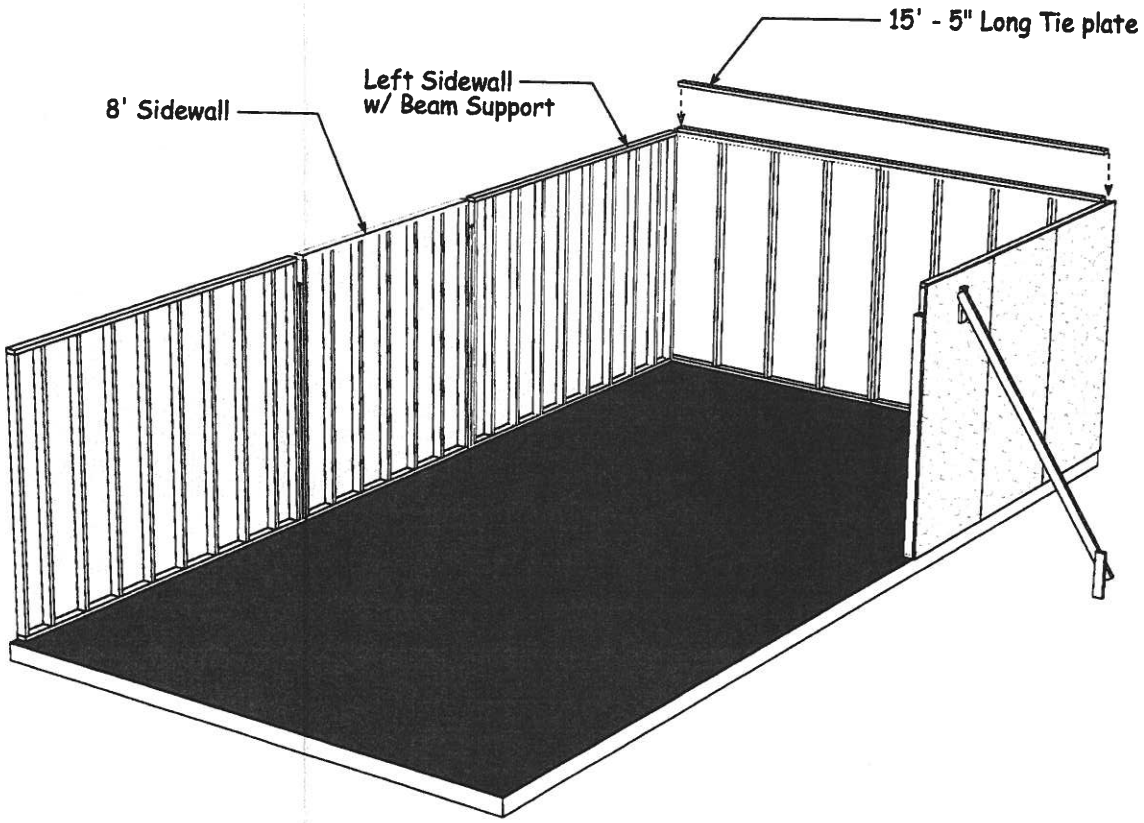

5. Install the remaining wall panels

Step 8 Install 2nd Floor Loft Beam

1. Cut (2) two 1-3/4" x 11-7/8" LVL micro-lam beams to a length of 16'-0". Glue and nail them together with 16d sinkers.
2. Cut (2) two 2x8-16' boards to 15' - 5". Position a 2x8 against the 16' beam as shown below.
3. Position 2x8 blocks, *leftover from door header*, at the top of the 2x8 and beam. **Important:** The hangers should line up across from each other. Install metal joist hangers on both 2x8's and beam. Install hanger with hanger nails.

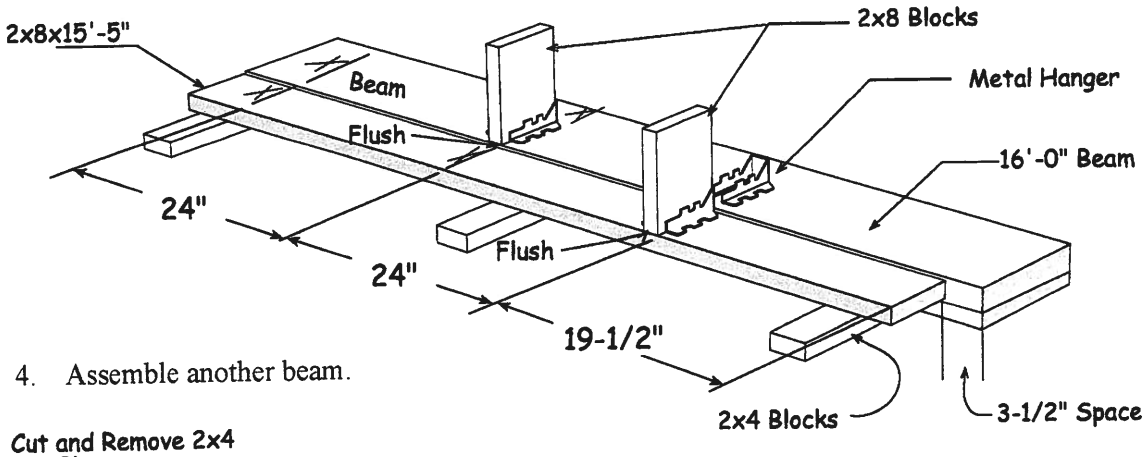

4. Assemble another beam.

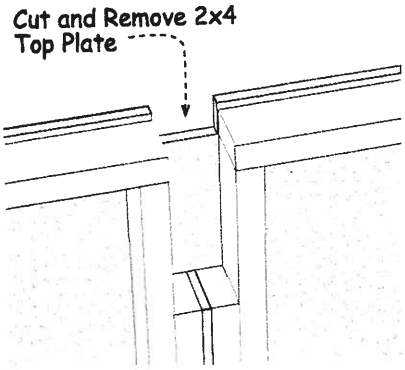

5. Cut the 2x4 top plate. Cut through the siding to remove the 2x4. The siding does not have to be removed. The soffit, when installed later, will cover the cut marks in the siding.

6. Place the beam into the beam pocket. Secure in place with 16d sinkers.

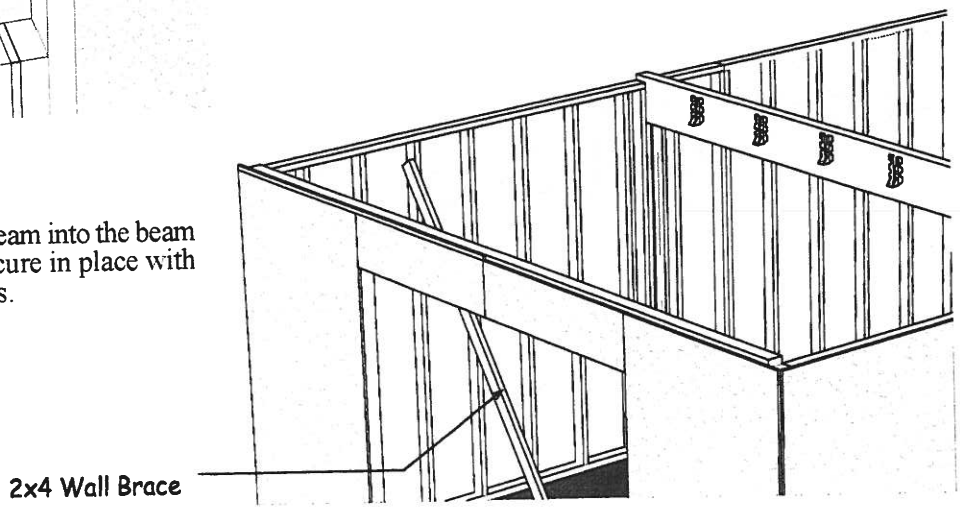

Step 9 Install Loft Floor

1. Install 10' long 2x4 tie plates on sidewalls. Use 16d sinkers to secure tie plates.

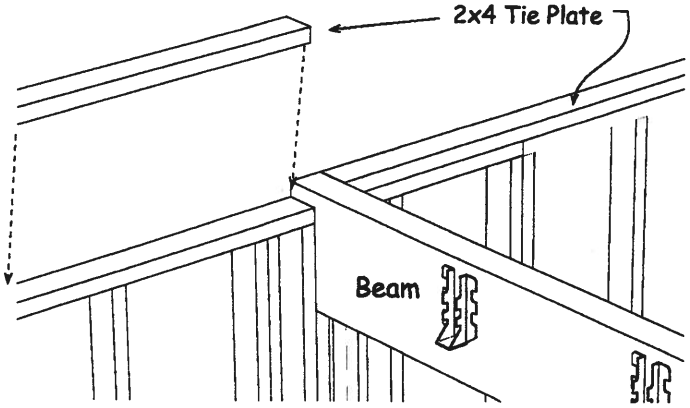

If you are installing the optional stair kit, install joist header and floor joist at the front of the building. Refer to the stair instructions to install the floor joist at the rear of the building.

2. Install the 2x8 boards, from **Step 8**, on the front and back walls, flush with the top of the tie plates. Secure the 2x8s to the wall plates and wall studs with 16d nails. **Important**: Nail 2x8 to each wall stud using (4) four 16d sinker nails in each wall stud.
3. Cut and install 2x8 floor joists between the 2x8 joist header and beam. You will need to install joist hangers on the opposite side of the beam.
4. Install 3/4" flooring. Start at the front wall with the 'Tongue' edge flush with the siding. Secure flooring with 8d spiral deck nail.
5. Tongue and groove flooring does not cover 48" width. Install a 1x4-8' white pine board filler after the last row of flooring. Cut flush with siding.

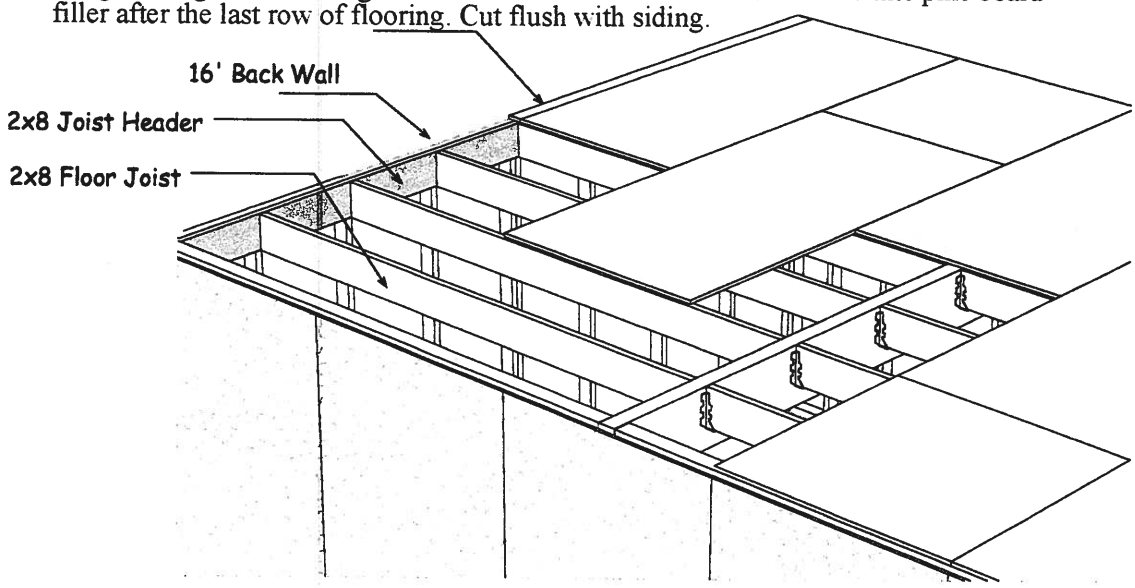

Step 10 Install Front & Back Wall Trim

1. Cut 1x4-10' trim boards to length for the front corners. Install trim flush with the bottom edge of the siding and the top of the loft floor. Install the boards flush with the siding on the sidewalls. Use 8d galv. nails to install all trim boards.

2. Cut and install 1x4-8' trim boards between the corner trim.
   Important: Install the trim board flush with the floor.

3. Repeat procedure to install trim at the rear of building.

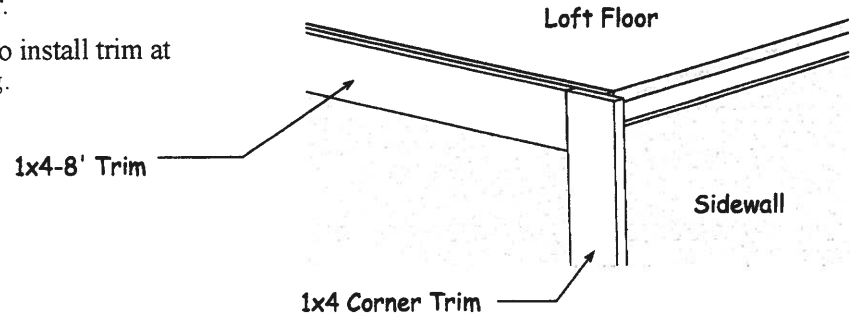

Step 11 Assemble Rear Roof Gable

Assemble Roof Gable on Loft Floor

1. The rear panels are numbered 6 through 10. Locate panels numbered 6 and 7. Lay these panels, *siding down*, on the front loft floor. Nail the panels together with 10d sinkers.

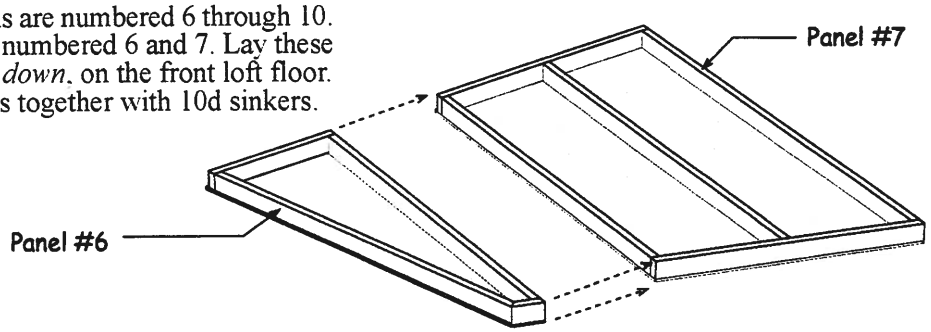

2. The 2x4 wall studs in the bottom wall frame are screwed to the outside 2x4s. If you are installing a window or loft door, remove the screws and move the 2x4s to create the opening width needed. The maximum opening width is 44-3/4".

   If no opening is necessary, center the wall studs in the opening.

3. Locate a 47-3/4" wide wall frame and an upper gable frame. The frames are numbered 8A and 8B. Nail these frames together using 10d sinkers.

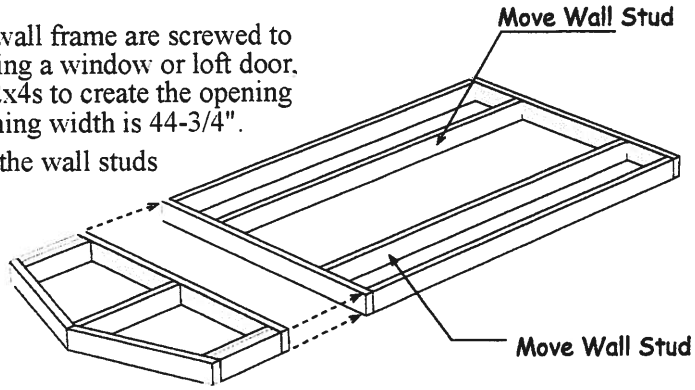

Step 11 Assemble Rear Roof Gable Continued

4. Position gable walls, *numbers 6 and 7*, on the floor with the siding facing up.
5. Install the center wall frame against the panels. Cut a 4x8 siding panel to the shape of the center gable and apply to center wall frame.
6. Fasten 2x4 packing blocks, *to the loft floor*, on the outside of the gable frames. Tack nail blocks or use 2-1/2" screws.

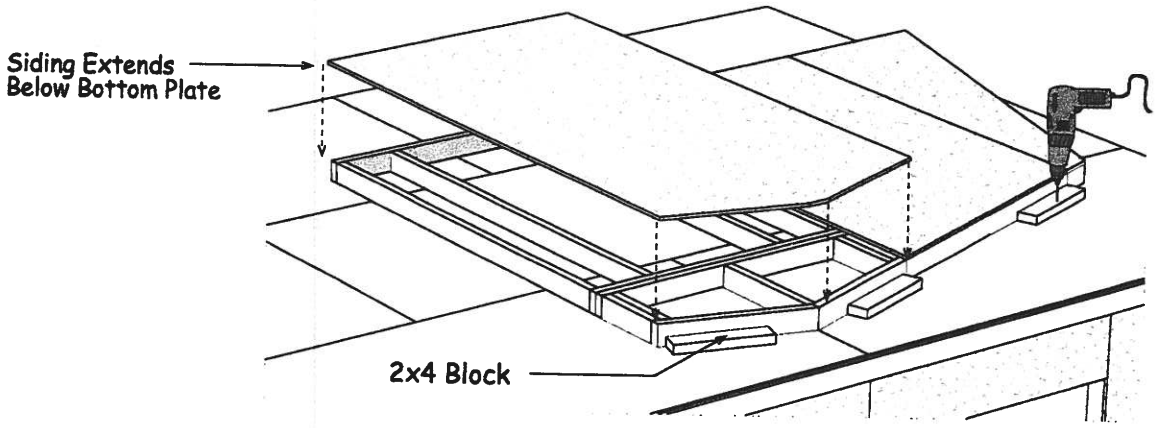

7. Locate gable panels numbered 9 and 10. Remove the siding from these panels. The siding panels are tacked to the walls with a few nails.

Front Wall

8. Install the gable frames numbered 9 and 10 to the center wall panel. Reapply the siding.
9. Fasten more 2x4 packing blocks, to the outside of the gable frames.

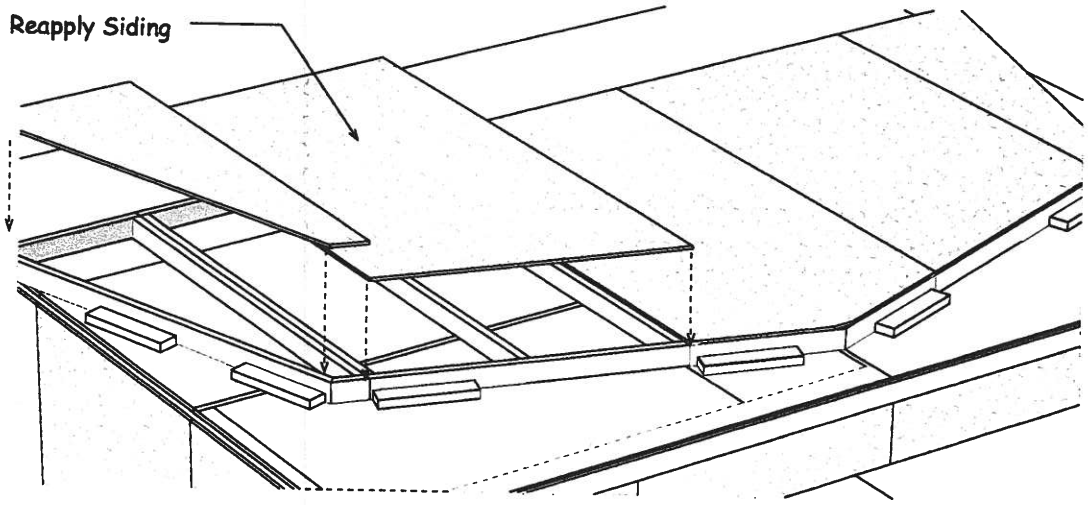

Step 12 Install 2x4 Gable Overhangs

1. Nail the siding where the siding panels overlap. Use 8d galv. nails.
2. Move the gable panel to the back loft area. Install 82-1/4" long 2x4s at the top of the gable. The 2x4s have a blue mark on one end. Install this end at the peak. Install the 2x4s so they extend 1/2" above the gable frame to receive the roof sheathing. Use 10d sinkers.
3. Nail another layer of 2x4s over the first layer to create a 3" deep gable overhang.

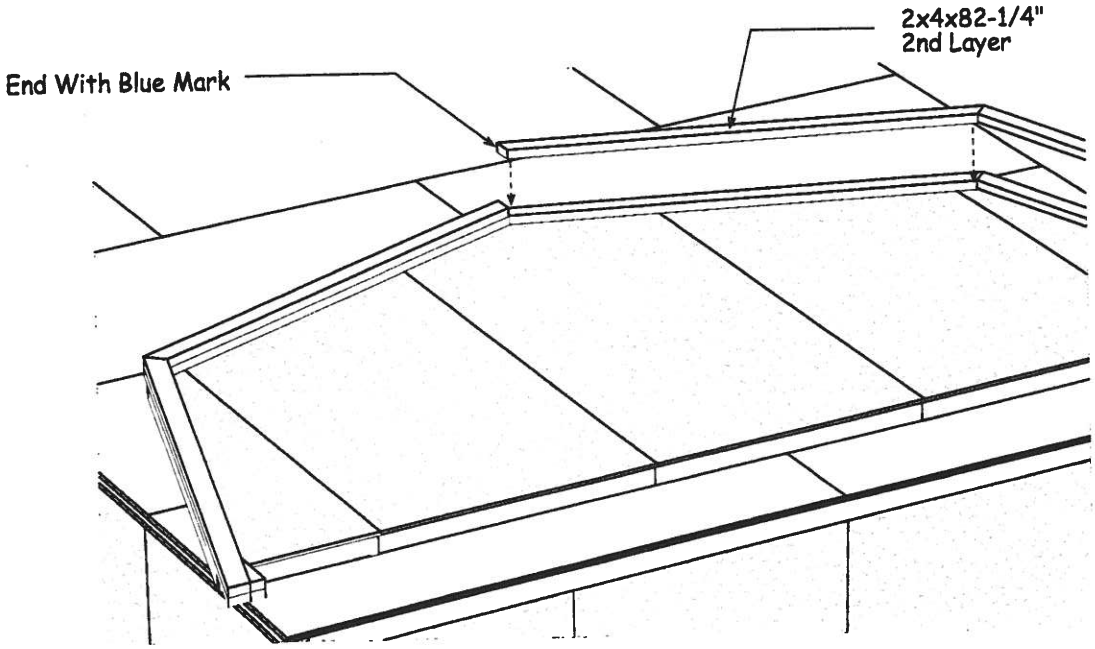

4. Locate (4) four 2x4s that are 84-1/2" long and have an angle block attached to one end. Install these 2x4s along the sides of the gable frame, extending 1/2" beyond the gable frame. Use 10d sinkers.

5. You can set this gable now. Refer to **Step 14**.
6. Repeat to assemble the front gable panels. When complete, move the gable frame to the back area of the loft to create room to assemble the roof trusses.

Step 13 Assemble Trusses

1. Lay 2x6 truss parts inside the 2x4 blocks. One end of the 81-3/4" long 2x6 boards have a blue mark. Place these ends together at the ridge. Add a 2x4 block at the bottom of the truss leg to keep this 2x6 from moving.
2. Install a 2x4 block at the ridge and at the knee area of the truss. The 2x4 blocks at the knee have a blue mark on the end. Install this end towards the ridge. Hold blocks in place with 7d sinkers until the gussets are installed.
3. Secure the 2x6 boards together using pre-cut wood gussets. Apply wood glue between the gussets and 2x6s. Secure gussets with (3) three rows of 6d common nails spaced 6" apart.
4. Turn truss over and apply gussets to the other side.
5. Assemble the remaining trusses.

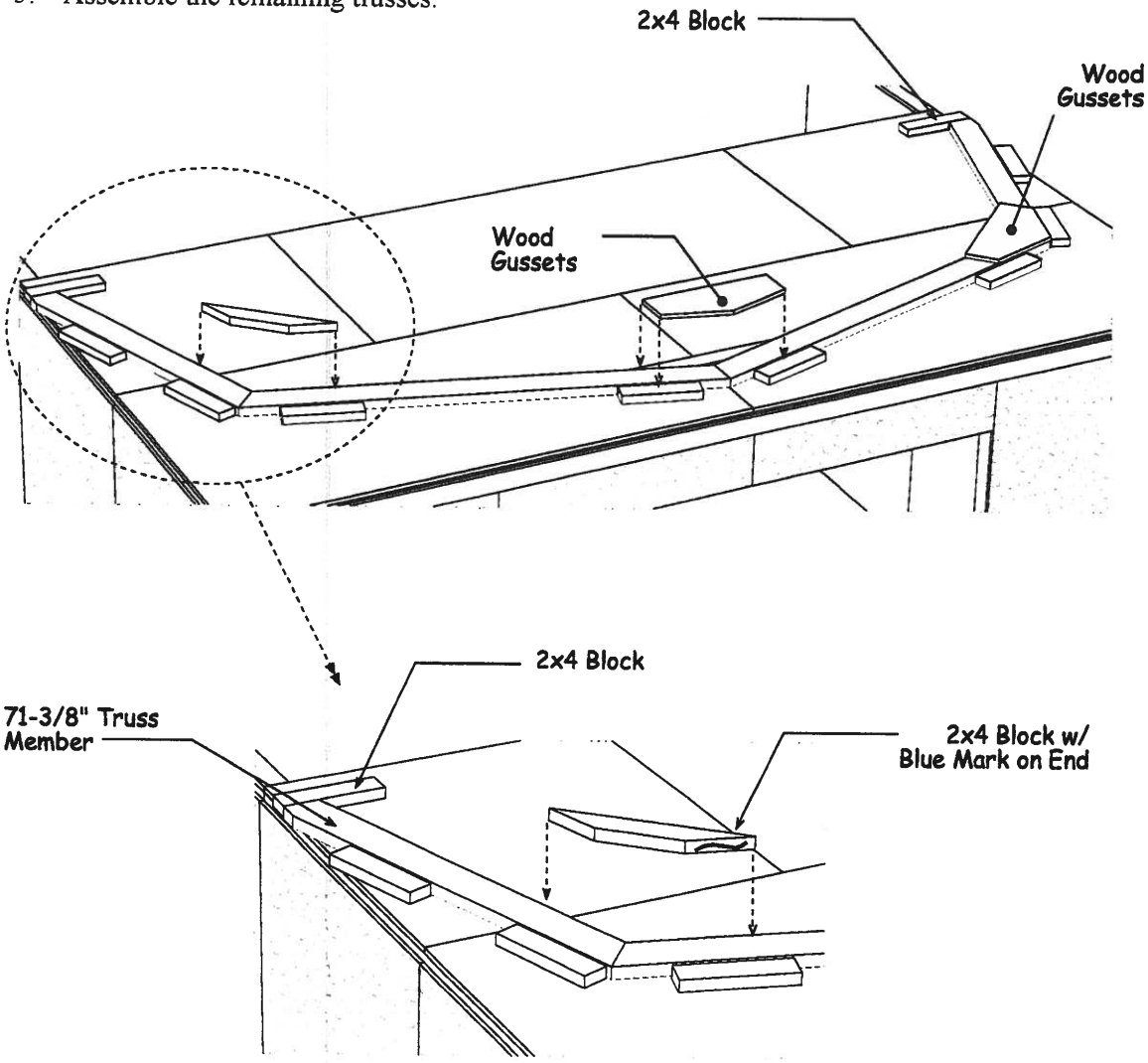

Step 14 Set Gables and 2x6 Truss Plate

1. Install front and rear gables. The gable siding will extend over the 1x4 trim on the lower wall panel.

   The bottom gable plate should overhang the loft floor the same distance on both ends. Nail gable plate to floor with 16d coated nails. Use a 2x4 to brace gables to floor.

2. Nail bottom edge of siding to 1x4 trim with 6d galv. nails.

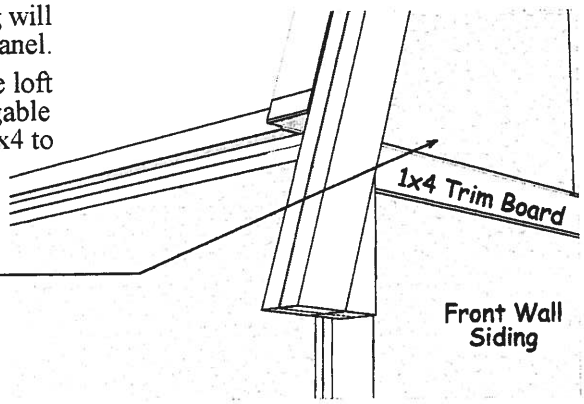

3. Install 2x6 plates 92" from the center of the building. When installed properly the 2x6 will project 1-1/2" past the **2x4 tie plate**. See detail below. Nail to floor with 16d nails.

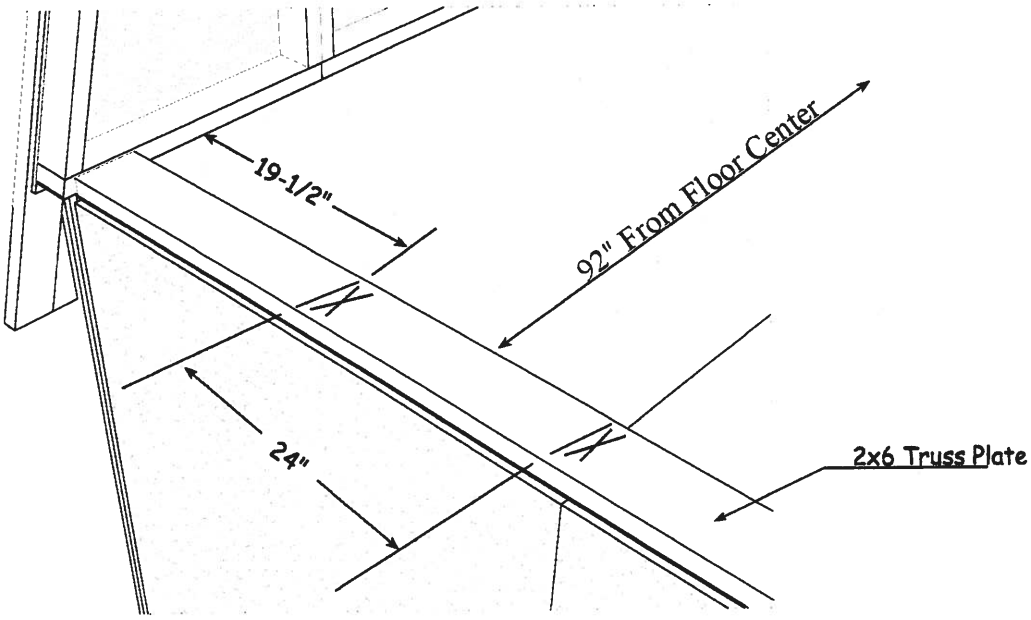

4. Layout 2x6 plate for trusses. **Important:** Start the truss layout 19-1/2" from the back of the gable plate. Then space trusses 24".
5. Install 2x6 plate on the opposite side.

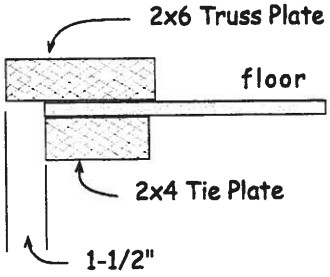

Step 15 Install Soffit Overhang on Sidewalls

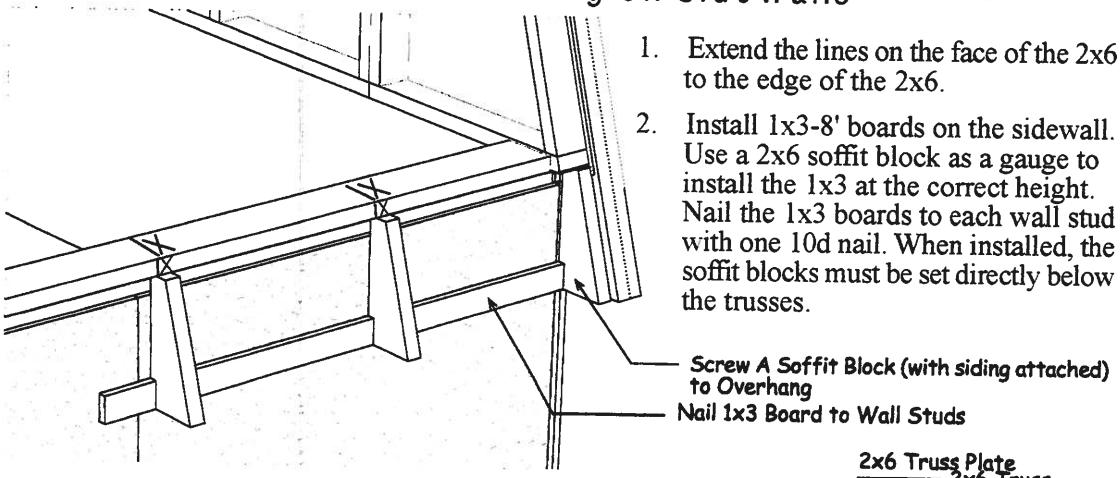

1. Extend the lines on the face of the 2x6 to the edge of the 2x6.
2. Install 1x3-8' boards on the sidewall. Use a 2x6 soffit block as a gauge to install the 1x3 at the correct height. Nail the 1x3 boards to each wall stud with one 10d nail. When installed, the soffit blocks must be set directly below the trusses.

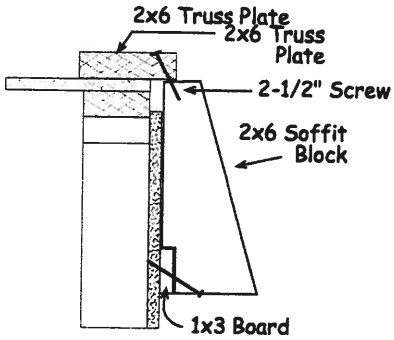

3. Position the 2x6 soffit blocks between the 1x3 board and the 2x6 truss plate. Secure the top of the soffit blocks in place by screwing through the 2x6 truss plate into the soffit block. Secure the bottom by toe-nailing through the bottom of the 2x6 soffit block into the 1x3 board. Use 7d coated nails. Install the soffit overhang on the opposite side of the building.

Step 16 Set Trusses

1. Install 2x6 trusses, over the 'X' marks, on the truss plate. Toenail the truss to plate, flush with the outside edge of the 2x6 truss plate. Use 7d sinker. Remove and use lower 2x4 wall bracing to brace the trusses.

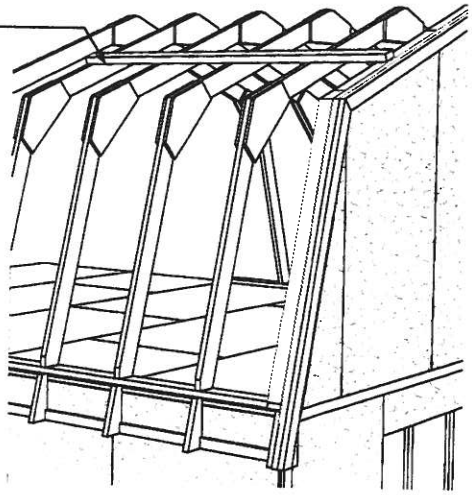

2. Secure trusses to 2x6 truss plates with 2x6 metal hangers. Nail metal hanger to truss plate and trusses <u>with hanger nails</u>.

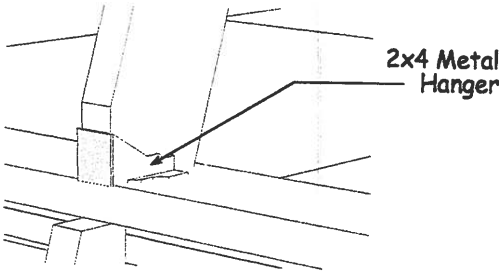

Step 17 Install Roof Sheathing

Install 7/16" OSB roof sheathing according to the layout below. Install roof sheathing flush with the 2x4 on the rear gable. Install the lower sheathing first. Use a straight edge to align the top of the sheathing with the top of the truss. See Detail 'B'. If you are installing ridge vent, cut the roof sheathing at the top of the building to be 1" below the peak of the truss. This will allow air circulation through the ridge vent.

Install sheathing using 7d sinkers. Space nails 12" apart.

Install a plyclip between each truss on the top row of sheathing .

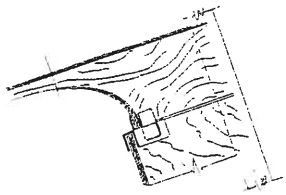

Plyclip

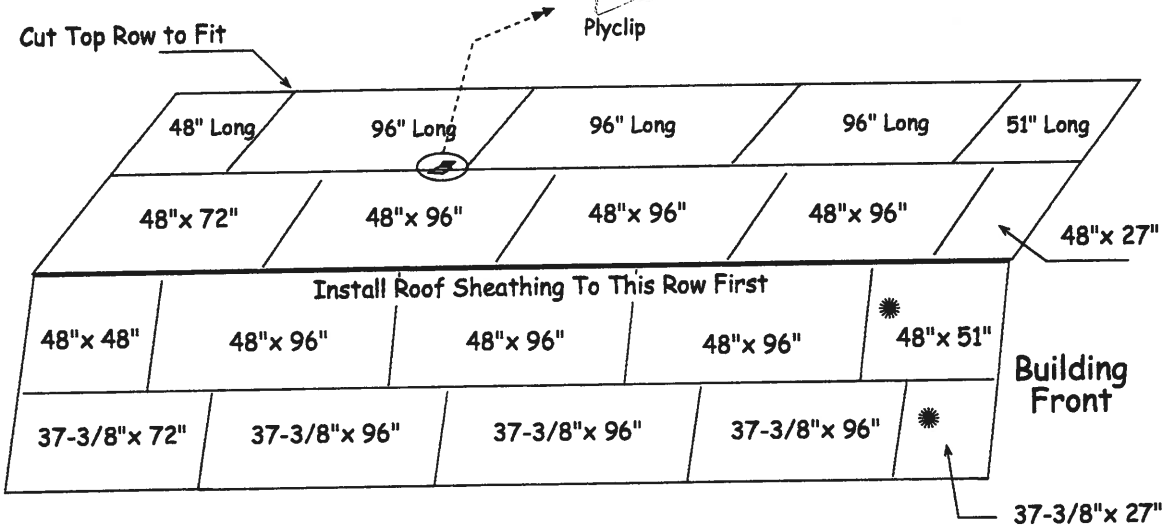

✹ **Cut Sheathing From Pallet**

Building Tip: Ridge vent provides ideal ventilation, preventing heat or moisture from damaging your building or its contents.

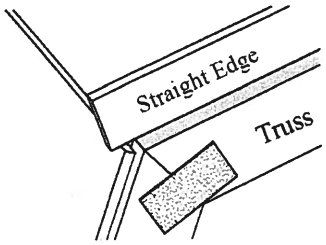

DETAIL 'B'

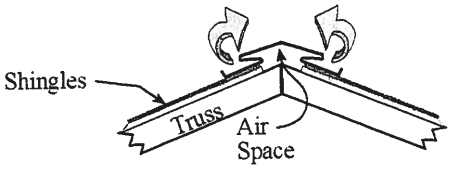

Ridge vent provides ideal ventilation.

Step 18 Install 1x6 Eave Soffit

1. Install 1x6 white pine boards under the 2x6 eave overhang. You can install soffit vents for added ventilation.
2. Cut and Install 1x4 corner trim under 1x6 soffit board. Cut to length.
3. Cut 3" wide primed siding panels to length and install under the gable overhang.
4. Cut 3 - 3/8" wide x 10" long primed siding panels to length and install under the gable overhang.

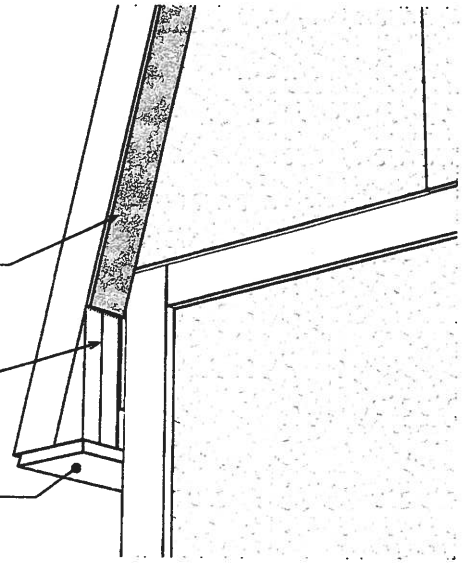

Step 19 Install Gable Trim

1. Install 82-1/4" long 1x6 white pine trim boards at the top of the gable overhangs. Install the end with the blue marking at the ridge. Install 1x6 flush with the top of the 2x4s. Use 8d galv. nails.
2. Install 86" long 1x6 white pine trim boards at the sides of the gable overhangs.

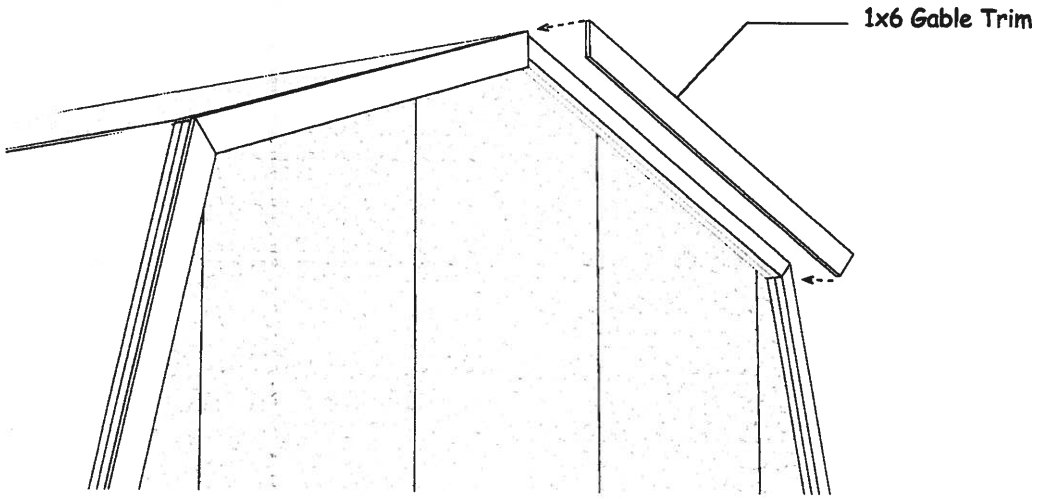

Packing List — Richmond 16' Wide x 32' Barn Kit

Qty.	Material Shipped by Others		
24	4 x 8	3/8"	LP Exterior Siding
32	4 x 8	7/16"	OSB Sheathing
16	4 x 8	3/4"	OSB Loft Flooring
4	2 x 4	8'	Treated Boards
4	2 x 4	12'	Treated Boards
1	2 x 4	16'	Treated Boards
6	2 x 4	8'	Framing Lumber
8	2 x 4	12'	Framing Lumber
3	2 x 4	16'	Framing Lumber
102	2x4	92-5/8"	Pre-cut Wall Studs
6	2 x 6	12'	Framing Lumber
2	2 x 8	10'	Door headers
7	2 x 8	8'	Floor Joist
14	2 x 8	12'	Floor Joist
2	2 x 8	16'	Joist Header
4	11-7/8" x 16'		LVL Beams
8	1 x 3	8'	White Pine Trim
10	1 x 4	8'	White Pine Trim
4	1 x 4	10'	White Pine Trim
14	2 x 8	Metal Floor Joist Hangers	
	Material Shipped by Best Barns		
10	Roof Gable Panels w/ siding applied		
8	2x4	82-1/4" Gable Overhang	
8	2x4	84-1/2" Gable Overhang	
30	2x6	81-3/4" Truss Components	
30	2x6	71-3/8" Truss Components	
1	Optional Barn Door Kit		

Qty.	Material Shipped by Best Barns		
30	2x6	12"	Soffit Blocks
4	2x6	12"	Soffit Blocks w/siding
4	1x6	84-1/8"	Gable Trim
4	1x6	73-1/2"	Gable Trim
8	1x6	72"	Beveled Soffit Boards
4	1x6	59"	Beveled Soffit Boards
15	2x4	23"	Truss Blocks
30	2x4	22"	Truss Blocks
30	10" x 24" Truss Gussets - ridge		
60	12" x 24" Truss Gussets - knee		
8	3" x 85"		Primed Soffit Panels
4	3-3/8" x 10"		Primed Soffit Panels
5	lbs.	16d Galv. Deck Nails	
10	lbs.	16d Sinkers	
12	lbs.	8d Galv. - siding & trim nails	
5	lbs.	8d Galv. - sprial loft flooring nails	
6	lbs.	7d Sinkers - loft flooring	
5	lbs.	6d Common for wood gussets	
7	lbs.	1-1/2" Joist Hanger Nails	
30	pcs.	2x6 Joist Hangers	trusses
42	pcs.	2x6 Truss Hangers	floor joist
3	32 oz Bottles Wood Glue		
40	Plyclips-for roof sheathing		7/16"
65	Wood Screws		2-1/2"
2	7/16"	OSB Roof Sheathing 48" x 90"	
12	5/8" x 3-1/4" x 16" Beam Pocket Fillers		

Install felt paper and metal roof edging perimeter of the roof area. Install shingles according to the instructions on the wrapper. If you need more detailed instructions on installing shingles, there are good publications at book stores or newsstands.

Material Needed 29 bdl. roof shingles, 15 pcs. roof edge and 3 rolls felt paper.

In the matter of the application of

HOLLY CORPORATION,
a Delaware corporation

for a final subdivision public report on

TRACT NO. 597

IMPERIAL COUNTY, CALIFORNIA

FINAL SUBDIVISION
PUBLIC REPORT

FILE NO. 3105-SD

ISSUED: JANUARY 18, 1962
AMENDED: JUNE 8, 1962
RENEWED: OCTOBER 10, 1967
EXPIRES: OCTOBER 10, 1972

This Report Is Not a Recommendation or Endorsement of the Subdivision But Is Informative Only.

Buyer or Lessee Must Sign That He Has Received and Read This Report. This Report Expires on Date Shown Above or Upon a Material Change.

SPECIAL NOTES

A COMMUNITY SERVICES DISTRICT HAS BEEN CREATED TO PROVIDE CERTAIN MUNICIPAL-TYPE SERVICES. SUCH A DISTRICT MAY FINANCE ITS OPERATION BY THE SALE OF BONDS UPON THE APPROVAL OF THE RESIDENTS OF THE DISTRICT. ABSENTEE LAND OWNERS HAVE NO VOICE IN THE APPROVAL OF BOND ISSUES, ETC.

A COMMUNITY SERVICES DISTRICT MAY ALSO LEVY A PROPERTY TAX OF $1.00 PER $100.00 ASSESSED VALUATION IN ADDITION TO COUNTY TAXES AND TAXES LEVIED FOR THE PAYMENT OF GENERAL OBLIGATION BONDS.

THIS SUBDIVISION LIES WITHIN THE BOUNDARIES OF THE COACHELLA VALLEY COUNTY WATER DISTRICT AND IS SUBJECT TO ALL ASSESSMENTS AND TAXES LEVIED BY SAID DISTRICT.

THE DISTRICT HAS MANY TAX RATES DEPENDING UPON THE SPECIFIC IMPROVEMENT DISTRICT CONCERNED. THE TAX RATES FOR 1966-67 VARY FROM $0.1826 TO $10.8823. PURCHASERS MAY CHECK WITH THE DISTRICT FOR THE TAX RATE APPLICABLE FOR THEIR PROPERTY.

YOUR ATTENTION IS ESPECIALLY DIRECTED TO THE PARAGRAPHS BELOW HEADED: (X) TITLE, (X) RESTRICTIONS, (X) ASSESSMENTS, (X) CONDITIONS OF SALE OR LEASE, (X) FLOOD AND DRAINAGE, (X) SEWAGE DISPOSAL.

LOCATION AND SIZE: In Imperial County on the west side of Salton Sea and the west side of Highway 86, south of Harvard Avenue, approximately 30 miles southeast of Indio.

Approximately 93 acres divided into 218 parcels.

(X) TITLE: A Preliminary Title Report shows title, among other things, to be subject to: Reservations of mineral, oil and gas rights, water rights with right of surface entry. This could mean that the owner of such rights may enter upon the land at some future date to develop same and could affect the landowner's ability to finance improvements.

Easements affecting certain lots for utilities, drainage, and other purposes. These easements as they affect individual lots may be determined by an examination of the Title Report and Recorded Tract Map.

ZONING AND INTENDED USE: Vacant lots are to be sold for residential purposes.

No building shall be erected, placed or altered on any lot until the construction plans and specifications and a plan showing the location of the construction have been approved by the Committee of Architecture and a fee of $5.00 has been paid;

All structures shall basically be of ONE LEVEL construction and no two-story structure shall be permitted unless, in the opinion of the "Committee of Architecture" such a structure conforms to the over-all design and pattern of development;

No person shall cause to be erected a sign, advertisement billboard or advertising structure of any kind on any of the unimproved residential lots, except that a temporary permit, limited to a ninety-day period, for signs for houses to be sold or exhibited be first obtained by application to the architectural committee. The architectural committee may approve the location of these signs within the front set-back of the lot. (This provision does not comply with Section 712 of the Civil Code of the State of California which states that provisions which purport to prohibit or restrict the right of the owner to display or have displayed on the property a sign of customary and reasonable dimensions advertising the property for sale is void.)

TAX ESTIMATES: Normally, for tax purposes, land and completed improvements are assessed at 25% of the fair market value. This value usually approximates the selling price. Taxes may be estimated by taking 25% of the sales price, dividing by 100 and then multiplying by the total tax rate.

The title company reports that this subdivision is located in tax code area 82-003, and that the latest available tax rate is $9.7184 per $100 of the assessed valuation. Any bonded debts or special district assessments approved after the above tax rate had been set could substantially increase the future tax rate. This information is for the 1966-67 fiscal year. The tax rate and assessed value may change in subsequent years.

(X) CONDITIONS OF SALE OR LEASE: Purchasers equitable interest will be transferred by a real property sales contract with installment payments. Prospective purchasers should read and understand the terms of the agreement. The Agreement for Sale and Purchase of Real Estate contains, among other provisions, the following:

1. Seller will not further encumber said property without buyers written consent.

2. Buyer will not transfer, assign or encumber this contract or any interest in same or interest in or right to the possession of said property without Seller's prior written consent. No such assignment or transfer shall be binding upon Seller until evidence thereof satisfactory to Seller has been filed with and accepted by Seller and the Seller's assignment fee paid therefor, together with any past due installment payments.

PURCHASE MONEY HANDLING WILL BE AS FOLLOWS: The subdivider has certified that all deposits or payments made by the purchaser under the contract of sale shall be deposited according to Section 11013.4(f) of the Business and Professions Code and Section 2814.5(1) of the Commissioner's Rules and Regulations ONLY UNTIL the following conditions have been met:

(a) A signed land sales contract is delivered to the buyer which contract shall contain a provision precluding the vendor from subsequently encumbering the property without the written consent of the contract vendee.

a mechanics lien subsequent to the date of the contract without the written consent of the buyer and without filing a surety bond with the city or county.

(c) The contract states that in the event that such additional improvements or work are undertaken by the subdivider he will furnish the contractor a copy of the Final Subdivision Public Report.

(X) ASSESSMENTS: The subdivider advises an improvement district has been established to finance streets and improvements.

The Tract No. 597 Improvement District was established under the provision of the Improvement Act of 1911 and bonds have been issued pursuant to the Improvement Act of 1911 and 1913.

The subdivider advises that the authorized bonded indebtedness of the district is $197,470.00 bearing interest at the rate of 6% per annum and payable over a term of 10 years. It is estimated that each lot or parcel will be assessed approximately $910.00 for these improvements, payable in annual installments of approximately $91.00 plus interest for a period of said years. This assessment is included in the sales price of the lot or parcel and will be a lien which may be foreclosed upon if the payments are in default. The amount of unpaid assessment per lot is $637.00.

(X) FLOOD AND DRAINAGE: Coachella Valley County Water District advises, "...The proposed subdivision lies on the Southwest slope of Salton Sea approximately 130 feet above the present water surface. It is not expected that the area will be subject to inundation from any rise of the sea's water surface.

"The subdivider has provided right of way for the construction of flood protection works to protect this area from stormwater flows. When these protection works have been constructed as planned, this area will be reasonably free from stormwater flows."

WATER: The Coachella Valley County Water District advises that it will furnish water to each lot in this tract.

(X) SEWAGE DISPOSAL: Soil conditions are not favorable for septic tanks and cesspools except on a temporary basis. This form of sewage disposal may not function properly as the area develops. Contracts have been entered into providing for the payment of certain monies by the subdividers to the Community Services District for the eventual installation of a community sewer system.

A Community Service District may levy assessments and have the sole and exclusive discretion as to time, location and design of the construction and installation of disposal treatment facilities which are to be installed.

UTILITIES: Note: Electricity and telephone lines have been brought into the area. The subdivider's firm has agreed to extension of power lines to any lot, without extension costs to purchasers, where approval for construction and necessary construction permits have been received by the purchaser. No public gas lines to the area are available.

ELECTRICITY:	Imperial Irrigation District.
GAS:	Indio Gas Company (Bottled gas only).
TELEPHONE:	California Water & Telephone Company.

Note: Contact the above companies regarding extension rules and regulations, service connections and costs involved.

FIRE PROTECTION: The Salton Community Services District has agreed to furnish fire protection through the West Shores Volunteer Fire Department. Subdivider has agreed to install fire hydrants at 800 foot intervals.

30 miles to the high school;
15 miles to the grammar school; and
30 miles to Indio for complete shopping facilities.

School bus service is available to both schools. Available public transportation consists of bus at Highway 86 and Marina Drive, which is a flag stop.

Note: Purchasers should contact the local school board regarding school facilities and bus service.

DECLARATION OF RESTRICTIONS

TRACT 597

THIS DECLARATION, Made this 21st day of December, 1961, by Salton Riviera, Inc., a California Corporation, have its principal place of business in the City of Azusa, Los Angeles County, California, hereinafter referred to as the Declarant.

WHEREAS, The Declarant is the owner of that certain Tract No. 597, Imperial County, California, as per plat thereof recorded in Book 8, Page 18, records of said county, and

WHEREAS the Declarant is about to sell, dispose of or convey the lots in said Tract No. 597 above described, and desires to subject the same to certain protective covenants, conditions, restrictions (hereinafter referred to as "Conditions") between it and the acquirers and/or users of the lots in said Tract.

NOW, THEREFORE, KNOW ALL MEN BY THESE PRESENTS:
That Declarant hereby certifies and declares that it has established and does hereby establish general plan for the protection, maintenance, development and improvement of said Tract, that

THIS DECLARATION is designed for the mutual benefit of the lots in said Tract and Declarant has fixed and does hereby fix the protective conditions upon and subject to which all lots, parcels and portions of said Tract shall be held, leased, or sold, and/or conveyed by them as such owners, each and all of which is and are for the mutual benefit of the lots in said Tract and of each owner thereof, and shall run with the land and shall inure to and pass said Tract and each and every parcel of land therein, and shall apply to and bind the respective successors in interest thereof, and are, and each thereof is imposed upon said Tract as a mutual, equitable servitude in favor of each and every parcel of land therein as the dominant tenement or tenements.

SAID CONDITIONS ARE AS FOLLOWS:
That use of Lot 31, Block 8, shall be restricted to use for school purposes.
That Lots 1 thru 4 inclusive of Block 1 and Lots 1 and 2 of Block 2 shall be designated as multiple residence lots and shall be improved, used and occupied under the conditions hereinafter set forth under CLASS I ZONE R-3 REGULATIONS
That all the remaining Lots shall be designated as single residence lots and shall be improved, used and occupied under the conditions hereinafter set forth under ZONE R-1 REGULATIONS.

II. GENERAL

A. No building, fence, patio, or other structure shall be erected, altered, added to, placed, or permitted to remain on said lots or any of them or any part of any such lot until and unless the plans showing flood areas, external design and the ground location of the intended structure

II. GENERAL

A. No building, fence, patio, or other structure shall be erected, altered, added to, placed, or permitted to remain on said lots or any of them or any part of any such lot until and unless the plans showing flood areas, external design and the ground location of the intended structure along with a plot plan and a checking fee in the amount of five ($5.00) dollars have been first delivered to and approved in writing by any two (2) members of a "Committee of Architecture" which shall be initally composed of WALTER E. BERG, BISHOP MOORE, and AUGUST DAMON provided that any vacancy on such committee caused by death, resignation, or disability to serve shallbe filled on the nomination of SALTON RIVIERA, INC. It shall be the purpose of this committee to provide for the maintenance of a high standard of architecture and construction in such manner as to enhance the aesthetic properties of the developed subdivision. Notwithstanding other requirements imposed, this committee shall require not less than Twelve hundred (1200) square feet of floor area for any single family residence INCLUDING carport,

garage, covered porches, covered contiquous patios, etc., with a minimum floor area of Eight hundred (800) square feet for living area in the dwelling portion of the structure. Al structures shall basically be of ONE LEVEL construction and no two-story structure shall be permitted unless, in the opinion of the "Committee of Architecture" such a structure conforms to the over-all design and pattern of development. On commercial structures submitted for approval, this "Committee" may require changes, deletions, or revisions in order that the architectural and general appearance of all such commercial buildings and grounds be in keeping with the architecture of the neighborhood and such as not to be detrimental to the public health, safety, general welfare and architectural appearance effecting the property values of the community in which such use or uses are to be located.

B. It shall remain the prerogative and in the jurisdiction of the "Committee" of Architecture" to review applications and grant approvals for exceptions to this declaration. Variations from Requirements and, in general, other forms of deviations from those restrictions imposed by this declaration, when such exceptions, variances and deviations, do, in no way, detract from the appearance of the premises, nor in any way be detrimental to the public welfare or the property of other persons located in the vicinity thereof, in the sole opinion of the "Committee"

C. All buildings shall have a septic tank and leeching pit or pits, as may be required, installed in the rear yard, in accordance with Imperial County Ordinance No. 239 and regulations accompanying same,

III. RESIDENTIAL ZONES:

A. As used in this declaration, "Residential Zones" means Zones R-1, R-2 and R-3.

B. A person shall not use any premises in any residential zone, which is designed, arranged or intended to be accupied or used for any purpose, other than expressly permitted in this declaration.

Storage of Materials

C. In any building project, during construction and sixty (60) days thereafter, property in a residential zone may be used for the storage of materials used in the construction of the individual buildings in project and for the contractor's temporary office. Said construction period shall not exceed ninety (90) days, unless specifically approved by the Committee of Architecture.

Livestock

D. A person shall not keep or maintain any live pig or hog or livestock or goats, cows or fowl of any age in any residential zone, whether such animals are kept or maintained for the personal use of the occupants or otherwise.

of the occupants or otherwise.

Signs

E. No person shall cause to be erected a sign, advertisement billboard or advertising structure of any kind of any of the unimproved residential lots, except that a temporary permit, limited to a ninety-day period, for signs for houses to be sold or exhibited be first obtained by application to the Architectural Committee. The architectural committee may approve the location of these signs within the front set-back of the lot.

Temporary Buildings

F. No temporary buildings, basement, cellar, tent, shack garage, barn or other outbuilding or structure shall, at any time, be used for human habitation, temporarily or permanently.

Trailer Use

G. A trailer may be used as a residence of the owner and his family during construction by such owner of a permanent residence,

RECEIPT FOR PUBLIC REPORT

The Owner, Subdivider or His Agent is Required to Give You an Opportunity to Read the Public Report Before Demanding or Accepting Any Deposit, Consideration or Written Offer to Purchase or Lease Lots or Parcels in a Subdivision: DO NOT SIGN UNLESS YOU HAVE READ THE REPORT.

I have read the Commissioner's Public Report on:

3105-SD
(File No.)

597
(Tract No. or Name)

I understand the report is not a recommendation or endorsement of the subdivision but is informative only.

The date of the copy of said report which I received and read is:

Oct 10, 1967

Name

Name

Address

Date

SUBDIVIDER IS REQUIRED TO RETAIN THIS RECEIPT FOR THREE YEARS.

for or intended to be used as a dwelling or apartment house, shall have on the same lot or parcel of land, automobile storage space conveniently accessible from the street, and not located at any place where the erection of structures is prohibited, of sufficient capacity to accommodate one (1) automobile for each family for the permanent housing of which such dwelling, apartment house, or other structure is designed.

D. SUBDIVISION OF LOTS:

No lot or parcel of land shall be divided into smaller lots or parcels under any conditions or circumstances whether for lease, sale, or rental purposes.

E. REQUIERED BUILDING AREA:

Notwithstanding other requirements imposed by these restrictions under GENERAL, the "Committee of Architecture" shall in all apartment buildings designed or intended to house three (3) or more fami require not less than five hundred (500) square feet of living area for each one bedroom unit, or not less than six hundred (600) square feet of living area for each two bedroom unit. In all buildings or establishments designed for, intended for, or used as Hotels or Motels, the "Committee of Architecture" shall require that each unit, room, suite, or apartment capable of, designed, or intended to be rented, leased, or let as an individual accommodation shall contain two hundred and fifty (250) square feet of living area including bathrooms and/or kitchens where included in the individual accommodation as outlined above. In such instances, where a comon or shared bath or kitchen is present, only 50% of the area of such shared facilities can be contributed to the required floor areaof two hundred fifty (250) square feet. In such instances where a public bathroom or toilet room or kitchen is present as the only such facilities available, the minimum required livable floor area of each individual accommodation shall contain two hundred (200) square feet.

F. BUILDING HEIGHT LIMITATIONS:

All structures shall be of ONE-LEVEL construction unless as otherwise provided for under GENERAL of these restrictions.

These conditions shall run with the land and shall be binding upon all parties and all persons claiming under them until January 1, 1968, at which time said Conditions and Covenants shall be automatically extended for successive periods of ten (10) years, unless by vote of the owners of a majority of the lots in said Tract, it is agreed to change said Conditions in whole or in part.

PROVIDED, FURTHER, that if any paragraph, section, sentence, clause or phrase of the restrictions, conditions, and covenants herein contained shall be or become illegal, null, or void, for any reason or shall be held by any court of competent jurisdictions to be illegal, null, or Void, the remaining paragraphs, sections, sentences, clauses or phrases herein contained shall not be affected thereby. It is hereby declared that these restrictions, conditions, and covenants herein contained would have been and are imposed and each paragraph, section, sentence, clause or phrase thereof, irrespective of the fact that any one or more other paragraphs, sections, sentences clauses or phrases are or shall become or be illegal, null, or void.

PROVIDED FURTHER, that if any owner of any lot in said property or his heirs, or assigns, shall violate or attempt to violate any of the conditions, covenants, and/or restrictions herein; it shall be lawful for any other person or persons owning any other lots in said property ot prosecute any proceeding at low or in equity against the person or persons violating or attempting to violate any such conditions, covenants, and/or restrictions and either to prevent him or them from so doing or to recover damages or other dues for such violation.

PROVIDED FURTHER, that a breach of any of the foregoing conditions, covenants, and/or restrictions shall not defeat or render invalid the lien of any mortgage, or deed of trust in good faith, and for value, as to said property or any part thereof, but such conditions, covenants, and/or restrictions shall be binding upon and effective against any owner of any lot or lots in said property whose title is acquired by foreclosure, trustee's sale, or otherwise.

IN WITNESS WHEREOF, SALTON RIVIERA, INC. has caused its corporate name and seal to be hereunto affixed by its officers thereunto duly authorized this _____ day of _____, 19___.

(OWNER) SALTON RIVIERA, INC.

By S/ Sam Winograd, President

By S/ Bishop Moore, Asst. Secretary

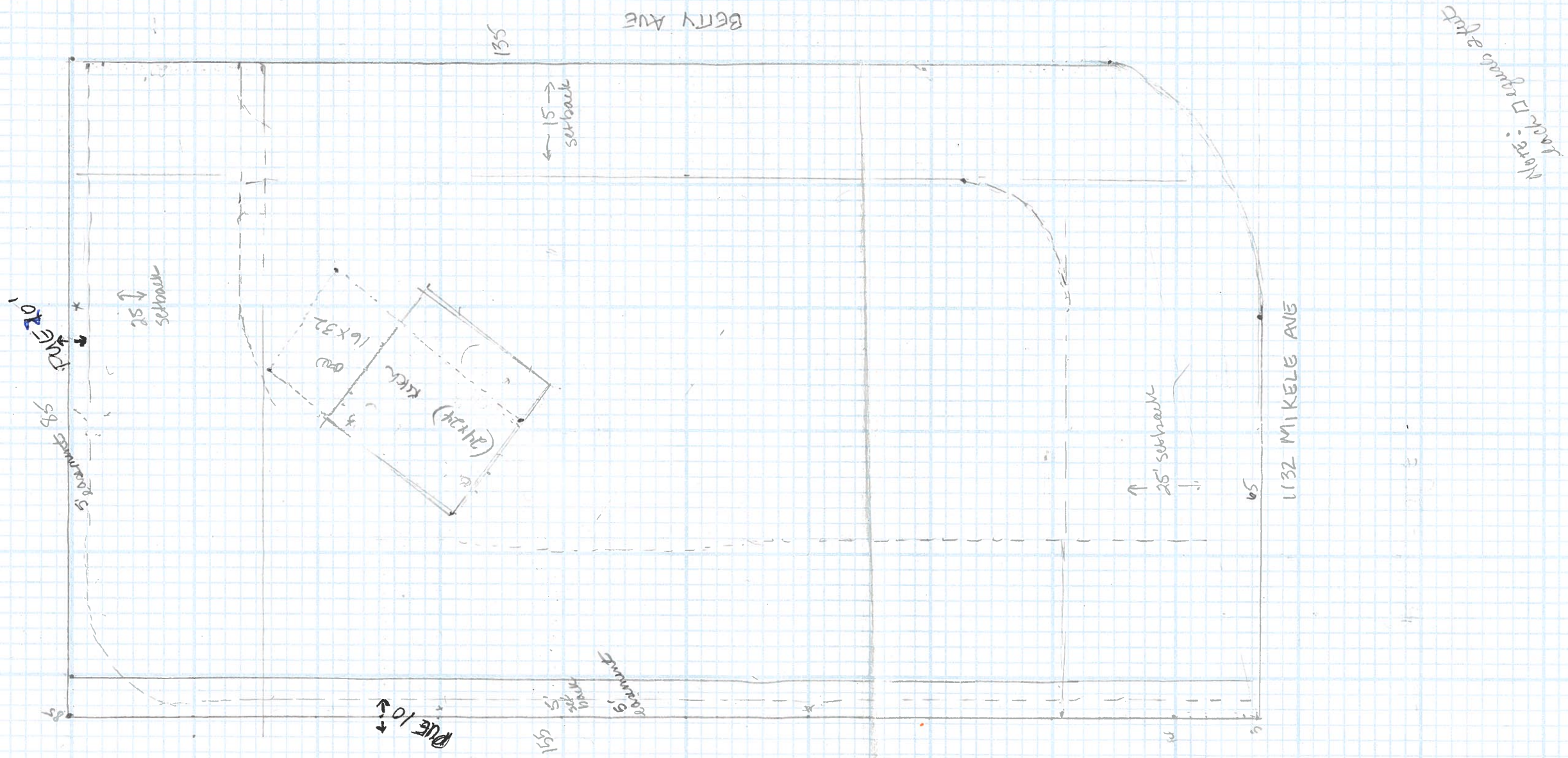
Alley
Alley: Dynamic Avenue
BERRY AVE
135
15' setback
1132 MIKELE AVE
25' setback
65
(24x24)
Deck
16x32
25' setback
5' setback
PUE 10'
155
5' setback
PUE 10'
85

Salton Community Services District

Architectural Committee Building Approval Form
Plan# 3076
Chartered by Chapter 59 of 1985 Codes and Laws – state of CA
Plans must conform to covenants, Conditions and Restrictions of tract.

Approved: _____ Disapproved: _____ Date: _____ Expiration Date: _____

Architectural Committee Review Fees:

Existing Building Additions:	$50.00	____	Check#____
New Construction:	$50.00	X	Check#____
Sewer Capacity Fee:	$1000.00	____	Check#____
Sewer Connection Fee:	$2700.00	____	Check#____ (Deposit) _____

(Capacity Fee/Connection Fee Payable at time of sewer connection Plan Approval fee and Developer fee due at time of plan submission)
THIS APPROVAL MEETS ALL SCSD CC&R'S, BUT MAY NOT MEET IMPERIAL COUNTY TITLE 9 LAND ORDINANCES.

ARCHITECTURAL PLAN REVIEW:

Michael Friese: _____ Approved: _____ Disapproved: _____ Date: _____

Ercik Cervantes _____ Approved: _____ Disapproved: _____ Date: _____

John Connelly _____ Approved: _____ Disapproved: _____ Date: _____

Kenneth Perry _____ Approved: _____ Disapproved: _____ Date: _____

Lizabeth Flowers _____ Approved: _____ Disapproved: _____ Date: _____

Street Address: _____ City: _____

Lot# _____ Block# _____ Tract# 583 Zone: _____
APN: 016-332-004-000 Lot Size: _____

Living Area

Dimensions: Width: 14 Length: 66 Total Square Feet: 924

Patios

Dimensions: Width: 9 Length: 20 Total Square Feet: _____

Carport or Garage

Dimensions: Width 9 Length: 35 Total Square Feet: 315

Room Addition

Dimensions: Width _____ Length: _____ Total Square Feet: _____

Mobile/Manufactured/Modular Homes Only

Date of Manufacture: 1980 Expected Date of Delivery: _____

I, the undersigned, certify all information to be true and accurate description of my plans and intentions.

Jose Arismendez — Jose Arismendez — (760) 289-0950
Owner's Signature — **Owner's Name (Printed)** — **Daytime Phone Number**

980 Venezuela Av Salton City CA 92274
Address, City, State, Zip Code

A permit must be obtained within 2years (24 months) from date of approval. If permit is not obtained, you will be required to re-submit for approval

SITE PLAN

I.C. PLANNING & DEVELOPMENT SERVICES DEPT
801 Main Street, El Centro, CA 92243 (760) 482-4236

READ INSTRUCTIONS ON THE BACK ! USE PEN TO DRAW – DO NOT USE PENCIL!

DRAW SITE LAYOUT PLAN TO SCALE & COMPLETE ALL NUMBERED SPACES!

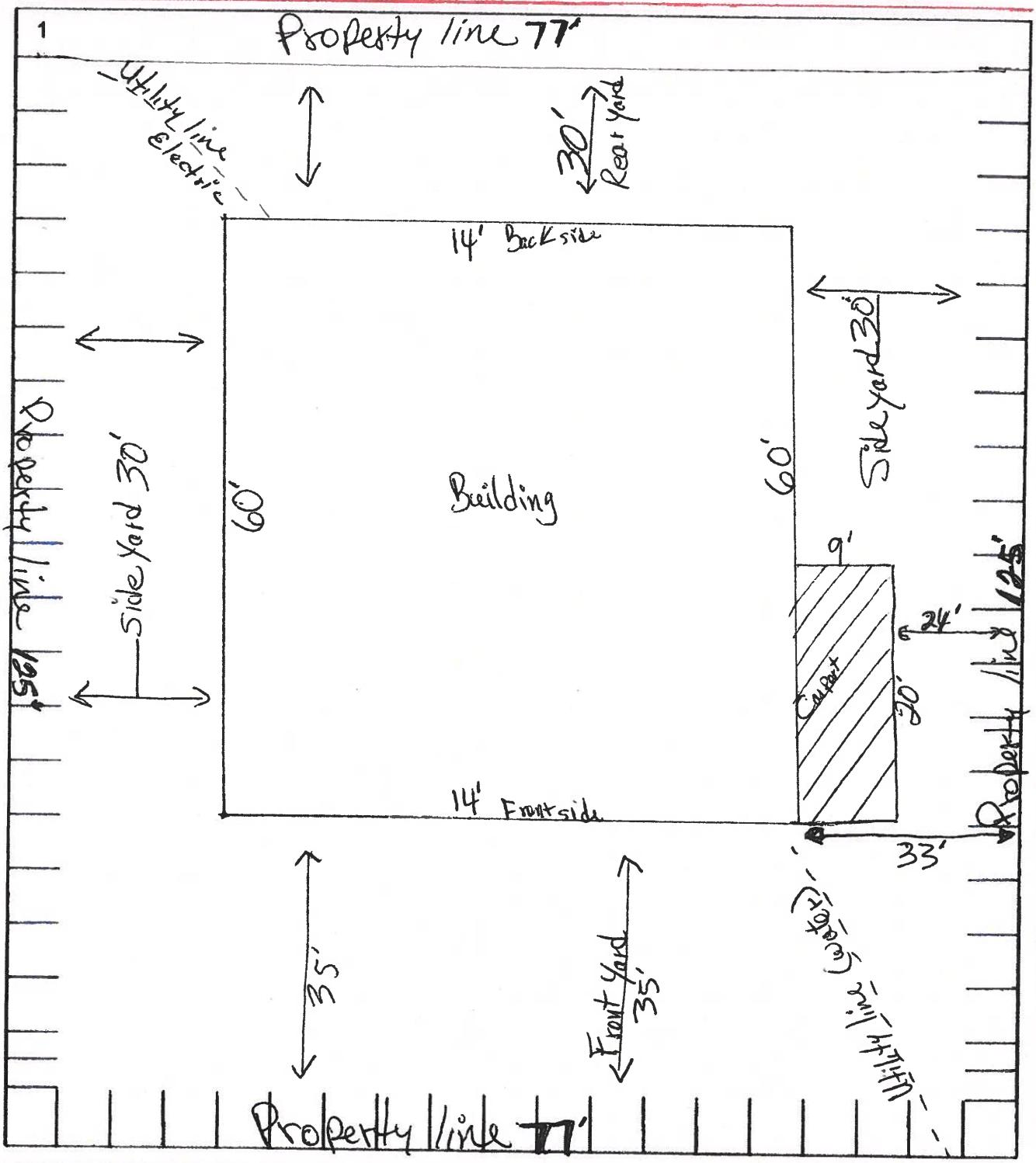

NAME OF APPLICANT	APPLICANT PHONE NO	SIZE OF PARCEL
2 Jose A. Arismendez	3 760-289-0950	4 77X125
PROJECT SITE ADDRESS		ASSESSORS PARCEL NO
5 980 Venezuela Avenue, Salton City CA 92274		6 016 332 004 000

WHITE - OFFICE MASTER / YELLOW - ASSESSORS / PINK - APPLICANT

DECLARATION OF RESTRICTIONS

TRACT 583

THIS DECLARATION, made this 13th day of August, 1959, by SALTON RIVIERA, INC., a California Corporation, having its principal place of business in the City of Azusa, Los Angeles County, California, hereinafter refferred to as the Declarant.

WHEREAS, the Declarant is the owner of that certain Tract No. 583, Imperial County, California, as per plat thereof recorded in Book 6, Pages 67, records of said County, and

WHEREAS the Declarant is about to sell, dispose of or convey the lots in said Tract No. 583 above described, and desires to subject the same to certain protective covenants, conditions restrictions (hereinafter referred to as "Conditions) between it and the asquirers and/or users of the lots in said Tract.

NOW, THEREFORE, KNOW ALL MEN BY THESE PRESENTS:
That Declarant hereby and declares that it has established and does hereby establish general plan for the protection, maintenance, development and improvement of said Tract, that

THIS DECLARATION is designed for the mutual benefit of the lots in said Tract and Declarant has fixed and does hereby fix the protective conditions upon and subject to which all lots, parcels and portions of said Tract shall be held, leased, or sold, and/or conveyed by them as such owners, each and all of which is and are for the mutual benefit of the lots in said Tract and of each owner thereof, and shall run with the land and shall inure to and pass said Tract and each and every parcel of land therein, and shall apply to and bind the respective successors in interest thereof, and are and each thereof is imposed upon said Tract as a mutual, equitable servitude in favor of each and every parcel of land therein as the dominant tenement or tenements.

SAID CONDITIONS ARE AS FOLLOWS:

That all of the lots within this subdivision shall be designated as single residence lots and shall be improved, used, and occupied under the conditions hereinafter set forth under ZONE R-1 REGULATIONS.

11. GENERAL

A. No building, fence, patio, or other structure shall be erected, altered, added to, placed, or permitted to remain on said lots or any of them or any part of any such lot until and unless the plans showing floor areas, external design and the ground location of the intended structure along with a plot plan and a checking fee in the amount of five ($5.00) dollars have been first delivered to and approved in writing by any two (2) members of a "Committee of Architecture" which shall be initially composed of C.W. Burmood, George McCarthy and August Damon, provided that any vacancy on such committee caused by death, resignation, or disability to serve shall be filled on the nomination of SALTON RIVIERA, INC., It shall be the purpose of this committee to provide for the maintenance of a high standard of architecture and construction in such a manner as to enhance the aesthetic properties of the developed subdivision. Notwithstanding other

B. It shall remain the prerogative and in the jurisdiction of the "Committee of Architecture"" to review applications and grant approvals for exceptions to this declaration. Variations from requirements and, in general, other forms of deviation from those restrictions imposed by this declaration, when such exceptions, variances and deviations do, in no way, detract from the appearance of the premises, nor in any way be detrimental to the public welfare or to the property of other persons located in the vicinity thereof, in the sole opinion of the "Committee".

All building shall have a septic tank and leeching pit or pits, as may be required, installed in the rear yard, in accordance with Imperial County Ordinance No. 239 and regulation accompanying same.

111. RESIDENTIAL ZONES:

A. As used in this declaration, "Residential Zones" means zones R-1, R-2, and R-3.

B. A person shall not use any premises in any residential zone, which is designed, arranged or intended to be occupied or used for any purpose, other than expressly permitted in this declaration.

C. In any building project, during construction and sixty (60) days thereafter, property in a residential zone may be used for the storage of material used in the construction of the individual buildings in project and for the contractor's temporary office. Said construction period shall not exceed ninety (90) days, unless specifically approved by the Committee of Architecture.

D. A person shall not keep any live pig or hog or livestock or goats, cows or fowl of any age in any residential zone, whether such animals are kept or maintained for the personal use of the occupants or otherwise.

E. No person shall cause to be erected a sign, advertisement billboard or advertising structure of any kind of any of the unimproved residential lots, except that a temporary permit, limited to a ninety-day period, for signs for houses to be sold or exhibited be first obtained by application to the ardhitectural committee. The architectural committee may approve the location of these signs within the front set-back of the lot.

F. No temporary buildings, basement, cellar, tent, shack garage, barn or other outbuildings or structure shall, at any time, be used for human habitation, temporarily or permanently.

G. A trailer may be used as a residence of the owner and his family during construction by such owner of a permanent residence, but only after approval has been gained from the architectural committee for such residence, but in no event shall said trailer be used longer that ninety days.

H. The exterior portions of all buildings, which are constructed of wood, stucco or cement shall be painted or stained immediately upon completion or shall have color mixed in the final structural application.

K. The storage of tools, landscaping instruments, household effects, machinery or machinery parts, empty or filled containers, boxes, or bags, trash, materials or other miscellaneous items that shall, in appearance, detract from the aesthetic values of the property shall be so placed and stored to be concealed from view from the public right of way. Trash for collection may be placed at the street line on regular collection days for a period not to exceed eighteen hours, prior to pick up.

ZONE R-1 REGULATIONS

A. PROPERTY IN ZONE R-1 MAY BE USED FOR:

1. A single family residence, together with outbuildings customary to such use, located on the same lot or parcel of land, including:
   a. A private garage with a capacity not to exceed three (3) automobiles.
   b. A boat repair or storage building for the personal use of the occupany.
   c. A children's playhouse.
   d. Lath or greenhouses.
   e. Tool houses.
   f. Hobby shops not used commercially.
2. Churches, temples, or other places used exclusively for religious worship shall be permitted within this zone upon approval of location and development plans by the "Committee of Architecture."
3. The following auxiliary uses, if they do not alter the character of the premises as single family residences:
   a. One detached guest house on the same premises as and not less than twenty (20) feet from the main building for the use of temporary guests of the occupants of the premises, if such quarters have no kitchen facilities and are not rented or otherwise used as a separate dwelling.
   b. Fences, walls, or hedges may be erected, started or maintained to a height of 72" above the adjacent grade when used as a property line or boundary separation, except that no fence, wall, or hedge may be used for this purpose in the front setback area of a lot in excess of 42" above the adjacent grade.

B. BUILDING SETBACKS:

1. Front yard setbacks shall conform to a minimum depth of twenty five (25) feet and a maximum depth of thirty five (35) feet.

ZONE R-1 REGULATIONS (cont'd)

side property line to eaves or other projections, when the auxiliary building or structure is a minimum of twenty (20) feet to the rear of the front wall of the residence nearest the street if attached, or forty (40) feet to the rear of the residence nearest the street if detached.

3. A rear yard shall be maintained of at least twelve (12) feet from the property line to the furthest structural projection, excepting fences, walls, and hedges when used as a boundary line separation which shall be ten (10) feet from the rear property line.

C. VEHICLE STORAGE:
Every dwelling or other structure in Zone R-1 designed for or intended to be used as a dwelling, shall have on the same lot or parcel of land, automobile storage space conveniently accessible from the street and not located at any place where the erection a structure is prohibited. This space shall be of sufficient capacity so as to not exceed maximum vehicle storage requirements as outlined above.

D. SUBDIVISION OF LOTS:
No lot or parcel of land shall be divided into smaller lots or parcels under any conditions or circumstances whether for lease, sale, or rental purposes.

E. REQUIRED LAND AREA:
A person shall not errect, construct, occupy, or use more than one (1) single family residence on any parcel of land or lot.

F. BUILDING HEIGHT LIMITATION:
All structures shall be of ONE-LEVEL construction unless as otherwise provided for under GENERAL of these restrictions.

ZONE R-3 REGULATIONS:

A. The following regulations shall apply in Zone R-3 Multiple Dwelling District:
   1. Class 1
      a. Any use permitted in Zone R-2
      b. Multiple dwellings or three (3) one-family dwellings of a permanent nature on each lot.
      c. Hotels and Motels in which incidental business may be conducted for the convenience of the residents of the buildings.
      d. Apartment buildings.
   2. Class 11.
      The following uses shall be classified under this zoning and shall be permitted if use, location, and development plan is approved by the "Committee of Architecture."
      a. Trailer Parks.
      b. Colleges and Universities.
      c. Private Schools.

B. BUILDING SETBACKS:
   1. Front yard setbacks shall conform to a minimum depth of twenty (20) feet from the front property line, excluding structural projections, eaves, overhangs, and porches of any building or structure.
   2. Side yard setbacks shall conform to those required in Zone R-1, except the maximum setback from a side street shall be reached to thirty (30) feet.
   3. Rear yard setback shall conform to those as required in Zone R-1.

C. VEHICLE STORAGE:
Every dwelling, apartment house, or structure in Zone R-3 designed

E. REQUIRED LAND AREA:
A person shall not erect, construct, occupy, or use more than one (1) single family residence on any parcel of land or lot.

F. BUILDING HEIGHT LIMITATION:
All structures shall be of ONE-LEVEL construction unless as otherwise provided for under GENERAL of these restrictions.

These conditions shall run with the land and shall be binding upon all parties and all persons claiming under them until January 1, 1968, at which time said Conditions and Covenants shall be automatically extended for successive periods of ten (10) years, unless by vote of the owners of a majority of the lots in said Tract, it is agreed to change said Conditions in whole or in part.

PROVIDED, FURTHER, that if any paragraph, section, sentence, clause or phrase of the restrictions, conditions and covenants herein contained shall be or become illegal, null, or void, for any reason or shall be held by any court of competent jurisdiction to be illegal, null, or void, the remaining paragraphs, sections, sentences, clauses or phrases herein contained shall not be affected thereby. It is hereby declared that these restrictions, conditions, and covenants herein contained would have been and are imposed and each paragraph, section, sentence, clause or phrase thereof, irrespective of the fact that any one or more other paragraphs, sections, sentences, clauses or phrases are or shall become or be illegal, null, or void.

PROVIDED FURTHER, that is any owner of any lot in said property or his heirs, or assigns, shall violate or attempt to violate any of the conditions, covenants and/or restrictions herein, it shall be lawful for any other person or persons owning any other lots in said property to prosecute any proceeding at law or in equity against the person or persons violating or attempting to violate any such conditions, covenants, and/or restrictions and either to prevent him or them from so doing or to recover damages or other dues for such violation.

PROVIDED FURTHER, that a breach of any of the foregoing conditions, covenants, and/or resstrictions shall not defeat or render invalid the lien of any mortgage, or deed of trust in good faith, and for value, as to said property or any part thereof; but such conditions, covenants, and/or restrictions shall be binding upon and effective against any owner of any lot or lots in said property whose title is acquired by foreclosure, trustee's sale, or otherwise.

IN WITNESS WHEREOF, SALTON RIVIERA, INC., has caused its corporate name and seal to be hereunto affixed by its officers thereunto duly authorized this 13th day of August, 1959.

(Owner) SALTON RIVIERA, INC.,

By_____

By_____

BEFORE THE
DEPARTMENT OF INVESTMENT
DIVISION OF REAL ESTATE
OF THE
STATE OF CALIFORNIA
W. A. SAVAGE, Real Estate Commissioner

In the matter of the application of

SALTON HEIGHTS DEVELOPMENT CO.,
a California corporation

for a final subdivision public report on

TRACT NO. 583
IMPERIAL COUNTY, CALIFORNIA

THIRD AMENDED
FINAL SUBDIVISION
PUBLIC REPORT

Res. No. 2444-SD

This Report Is Not a Recommendation or Endorsement of the Subdivision But Is Informative Only.

Buyer or Lessee Must Sign That He Has Received and Read This Report.

THIS REPORT EXPIRES FIVE YEARS FROM DATE OR UPON MATERIAL CHANGE.

June 15, 1962

SPECIAL NOTES:

1. CONTRACTS OF SALE WILL BE USED. UNLESS THE SELLER'S SIGNATURE IS NOTARIZED, THE CONTRACT CANNOT BE RECORDED AND THE PURCHASER'S INTEREST MAY BE JEOPARDIZED.

   PURCHASERS' INTERESTS ARE FURTHER JEOPARDIZED IN THE CONTRACTS USED IN THIS SUBDIVISION DUE TO A PROVISION THAT THE ENTIRE UNPAID BALANCE MAY BE DUE IF THE CONTRACT IS RECORDED.

2. PURCHASERS WILL BE REQUIRED TO DEVELOP THEIR OWN INDIVIDUAL SEWAGE SYSTEM ON A TEMPORARY BASIS, DUE TO UNFAVORABLE SOIL CONDITIONS, AND UNTIL AN ADEQUATE CENTRAL SEWAGE SYSTEM IS INSTALLED BY THE COMMUNITY SERVICES DISTRICT. THE SUBDIVIDER HAS AGREED TO THE PAYMENT OF MONIES FOR INSTALLATION OF A COMMUNITY SEWER SYSTEM BY THE DISTRICT.

ADDITIONAL INFORMATION FOLLOWS IN NARRATIVE FORM:

LOCATION AND SIZE: In Imperial County on the west side of Salton Sea and the east side of Highway 99, at Johnson Avenue, approximately 30 miles southeast of Indio.

Approximately 70 acres divided into 207 parcels.

RESTRICTIONS AND OTHER MATTERS OF RECORD: Easements, conditions, reservations and restrictions that may run with the land including City or County zoning restrictions should be investigated by the Purchaser. Copies of those items

which are recorded may be inspected at the office of the Imperial County Recorder. Information about zoning may be obtained at the office of the Imperial County Planning Commission.

All under-ground water in, under, or flowing through said land and water rights appurtenant thereto are being reserved by prior owners.

Title excepts all oil, gas, etc., minerals with the right to use so much of the surface of the land necessarily incident to mining, drilling, or otherwise developing such rights and as reserved in the patent from the State of California, dated December 6, 1951, Recorded in Book 832, Page 409 of Official Records. (Refers to land within boundaries of Section 28)

STREETS: have been offered for dedication for public use and have been accepted by the County.

FLOOD AND DRAINAGE: The subdividers' engineer advises, "...There can be no possible damage from inundation from rising waters of Salton Sea due to the fact that the elevations in this tract are far above any level generally accepted to which the sea may rise.

"There are no washes traversing this tract, and all lots are reasonably free from flood hazards."

The Division of Real Estate has no engineering personnel to make independent judgments on the suitability of drainage arrangements. Purchasers should make further inquiry of the subdivider or local government officials.

WATER: The Coachella Valley County Water District has agreed to furnish water to each lot in this tract. This county water district may levy taxes to finance projects to install and maintain water systems within the district.

SEWAGE DISPOSAL: Soil conditions are not favorable for septic tanks and cesspools except on a temporary basis. This form of sewage disposal may not function properly as the area develops. Contracts have been entered into providing for the payment of certain monies by the subdividers to the Community Services District for the eventual installation of a community sewer system.

A Community Service District may levy assessments and have the sole and exclusive discretion as to time, location and design of the construction and installation of disposal treatment facilities which are to be installed.

The Division of Real Estate does not have engineering personnel to determine the requirements of such a system or the costs involved. There is no assurance as to when or if each and every lot in this subdivision will receive the services of a sewage system.

DESERT WIND AND RAINS: Heavy winds blow from time to time in all desert regions in California, and this may or may not prove detrimental to this subdivision. During certain periods of the year heavy rains may occur in desert regions of California.

IN ADDITION TO THE ABOVE, THIS SUBDIVIDER ADVISES REGARDING FOLLOWING ITEMS:

PURCHASE MONEY HANDLING: The subdivider has certified he will impound all funds received from each purchaser in an escrow depository or trust account at Bank of America, Azusa Branch, ONLY UNTIL the contract is executed and delivered to the purchaser, excepting for such amounts as the subdivider may properly cover by furnishing a bond to the State of California. (Ref. Sections 11013, 11013.4(a), 11013.4(b), Business and Professions Code.)

CONTRACTS OF SALE: In addition to the Special Notes on Contracts on Page 1, the contracts used require written consent of the seller to transfer the contract, and a provision that all money paid in and all rights are forfeited by the buyer if he does not comply with the terms of the contract. Prospective purchasers should read and understand the contract before signing same.

Subdivider advises a deed will be issued, upon request of any purchaser, at such time as one-third of the principal balance has been paid on the contract of sale.

UTILITIES: Note: Electricity and telephone lines have been brought into the area. The subdivider's firm has agreed to extension of power lines to any lot, without extension costs to purchasers, where approval for construction and necessary construction permits have been received by the purchaser. No public gas lines to the area are available.

ELECTRICITY:	Imperial Irrigation District
GAS:	Indio Gas Company (Bottled gas only)
TELEPHONE:	California Water & Telephone Company

Note: Contact the above companies regarding extension rules and regulations, service connections and costs involved.

FIRE PROTECTION: The Salton Community Services District has agreed to furnish fire protection through the West Shores Volunteer Fire Department. Subdivider has agreed to install fire hydrants at 800 feet intervals.

MISCELLANEOUS: It is approximately:

30 miles to the high school;
15 miles to the grammar school; and
30 miles to Indio for complete shopping facilities.

School bus service is available to both schools. Available public transportation consists of bus at Highway 99 and Marina Drive, which is a flag stop.

Note: Purchasers should contact the local school board regarding school facilities and bus service.

LF:as

K. The storage of tools, landscaping instruments, household effects, machinery or machinery parts, empty or filled containers, boxes, or bags, trash, materials or other miscellaneous items that shall, in appearance, detract from the aesthetic values of the property shall be so placed and stored to be concealed from view from the public right of way. Trash for collection may be placed at the street line on regular collection days for a period not to exceed eighteen hours, prior to pick up.

ZONE R-1 REGULATIONS

A. PROPERTY IN ZONE R-1 MAY BE USED FOR:

1. A single family residence, together with outbuildings customary to such use, located on the same lot or parcel of land, including:
   a. A private garage with a capacity not to exceed three (3) automobiles.
   b. A boat repair or storage building for the personal use of the occupany.
   c. A children's playhouse.
   d. Lath or greenhouses.
   e. Tool houses.
   f. Hobby shops not used commercially.
2. Churches, temples, or other places used exclusively for religious worship shall be permitted within this zone upon approval of location and development plans by the "Committee of Architecture."
3. The following auxiliary uses, if they do not alter the character of the premises as single family residences:
   a. One detached guest house on the same premises as and not less than twenty (20) feet from the main building for the use of temporary guests of the occupants of the premises, if such quarters have no kitchen facilities and are not rented or otherwise used as a separate dwelling.
   b. Fences, walls, or hedges may be erected, started or maintained to a height of 72" above the adjacent grade when used as a property line or boundary separation, except that no fence, wall, or hedge may be used for this purpose in the front setback area of a lot in excess of 42" above the adjacent grade.

B. BUILDING SETBACKS:

1. Front yard setbacks shall conform to a minimum depth of twenty five (25) feet and a maximum depth of thirty five (35) feet from the front property line to the furthest structural projection, including eaves, overhangs, porches of any building or structure.
2. A side yard shall be maintained of at least five (5) feet in depth from all side property lines to the building line of any structure, with a minimum clearance of 30" from eaves or other projections to the side property line, EXCEPT on corner lots which shall maintain a minimum setback of (10) ten feet or a maximum thirty-five (35) feet from the side street line. An attached garage, a detached garage or other auxiliary buildings or structures, not intended or used for human habitation, shall be located to provide a minimum 12" clearance from the

side property line to eaves or other projections, when the auxiliary building or structure is a minimum of twenty (20) feet to the rear of the front wall of the residence nearest the street if attached, or forty (40) feet to the rear of the residence nearest the street if detached.

3. A rear yard shall be maintained of at least twelve (12) feet from the property line to the furthest structural projection, excepting fences, walls, and hedges when used as a boundary line separation which shall be ten (10) feet from the rear property line.

C. VEHICLE STORAGE:
Every dwelling or other structure in Zone R-1 designed for or intended to be used as a dwelling, shall have on the same lot or parcel of land, automobile storage space conveniently accessible from the street and not located at any place where the erection a structure is prohibited. This space shall be of sufficient capacity so as to not exceed maximum vehicle storage requirements as outlined above.

D. SUBDIVISION OF LOTS:
No lot or parcel of land shall be divided into smaller lots or parcels under any conditions or circumstances whether for lease, sale, or rental purposes.

E. REQUIRED LAND AREA:
A person shall not erect, construct, occupy, or use more than one (1) single family residence on any parcel of land or lot.

F. BUILDING HEIGHT LIMITATION:
All structures shall be of ONE-LEVEL construction unless as otherwise provided for under GENERAL of these restrictions.

ZONE R-3 REGULATIONS:

A. The following regulations shall apply in Zone R-3 Multiple Dwelling District:
   1. Class 1
      a. Any use permitted in Zone R-2
      b. Multiple dwellings or three (3) one-family dwellings of a permanent nature on each lot.
      c. Hotels and Motels in which incidental business may be conducted for the convenience of the residents of the buildings.
      d. Apartment buildings.
   2. Class 11.
      The following uses shall be classified under this zoning and shall be permitted if use, location, and development plan is approved by the "Committee of Architecture."
      a. Trailer Parks.
      b. Colleges and Universities.
      c. Private Schools.

B. BUILDING SETBACKS:
   1. Front yard setbacks shall conform to a minimum depth of twenty (20) feet from the front property line, excluding structural projections, eaves, overhangs, and porches of any building or structure.
   2. Side yard setbacks shall conform to those required in Zone R-1, except the maximum setback from a side street shall be reached to thirty (30) feet.
   3. Rear yard setback shall conform to those as required in Zone R-1.

C. VEHICLE STORAGE:
Every dwelling, apartment house, or structure in Zone R-3 designed for or intended to be used as a dwelling or apartment house, shall have on the same lot or parcel of land, automobile storage space conveniently accessible from the street, and not located at any place where the erection of structures is prohibited, of succicient capacity to accommodate one (1) automobile for each family for the permanent housing of which such dwelling, apartment house, or other structures is designed.

D. SUBDIVISION OF LOTS:
No lot or parcel of land shall be divided into smaller lots or parcels under any conditions or circumstances whether for lease, sale, or rental purposes.

E. REQUIRED LAND AREA:
A person shall not erect, construct, occupy, or use more than one (1) single family residence on any parcel of land or lot.

F. BUILDING HEIGHT LIMITATION:
All structures shall be of ONE-LEVEL construction unless as otherwise provided for under GENERAL of these restrictions.

These conditions shall run with the land and shall be binding upon all parties and all persons claiming under them until January 1, 1968, at which time said Conditions and Covenants shall be automatically extended for successive periods of ten (10) years, unless by vote of the owners of a majority of the lots in said Tract, it is agreed to change said Conditions in whole or in part.

PROVIDED, FURTHER, that if any paragraph, section, sentence, clause or phrase of the restrictions, conditions and covenants herein contained shall be or become illegal, null, or void, for any reason or shall be held by any court of competent jurisdiction to be illegal, null, or void, the remaining paragraphs, sections, sentences, clauses or phrases herein contained shall not be affected thereby. It is hereby declared that these restrictions, conditions, and covenants herein contained would have been and are imposed and each paragraph, section, sentence, clause or phrase thereof, irrespective of the fact that any one or more other paragraphs, sections, sentences, clauses or phrases are or shall become or be illegal, null, or void.

PROVIDED FURTHER, that is any owner of any lot in said property or his heirs, or assigns, shall violate or attempt to violate any of the conditions, covenants and/or restrictions herein, it shall be lawful for any other person or persons owning any other lots in said property to prosecute any proceeding at law or in equity against the person or persons violating or attempting to violate any such conditions, covenants, and/or restrictions and either to prevent him or them from so doing or to recover damages or other dues for such violation.

PROVIDED FURTHER, that a breach of any of the foregoing conditions, covenants, and/or resstrictions shall not defeat or render invalid the lien of any mortgage, or deed of trust in good faith, and for value, as to said property or any part thereof; but such conditions, covenants, and/or restrictions shall be binding upon and effective against any owner of any lot or lots in said property whose title is acquired by foreclosure, trustee's sale, or otherwise.

IN WITNESS WHEREOF, SALTON RIVIERA, INC., has caused its corporate name and seal to be hereunto affixed by its officers thereunto duly authorized this 13th day of August, 1959.

(Owner) SALTON RIVIERA, INC.,

By_____

By_____

Recorded: August 13, 1959
Document No. 41
Book No. 1024
Page No. 684